ComfoValve Luna S125, supply valve, 125 mm

Article number: 705 613 126 / 705 613 135 / 705 613 125

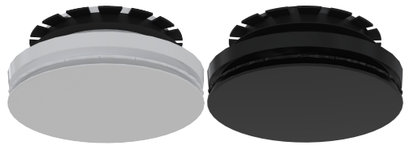

Technical Specification

Finish	White (RAL 9003) / Black (RAL 9005)
Quantity	1 / 1 / 24
Spigot diameter	125 mm
Spigot length	40 mm
Facia diameter	170 mm
Weight	0.31 kg
Lockable	Yes
Adjustable	Yes
Spare parts	Replacement seal - 705 000 800 Replacement cover - 705 613 002 Air Blocker - 705 613 001

Info

Minimal height of just 30 mm, regardless of the selected air volume setting
Optimised outflow area for silent and draught-free air supply due to the Coandă effect
Tool-free installation, adjustment and maintenance
The inside of the valve can be labelled to document the selected setting
The air flow setting locking mechanism prevents unintentional changes to the settings, for example during cleaning
Zehnder Air Blocker valve insert (705 613 001) limits outflow angle to 240° to protect sensitive living areas, e.g. above doors
Discreet and timeless design
Rec. max flow 20.8 l/s (75 m³hr)

Dimensions

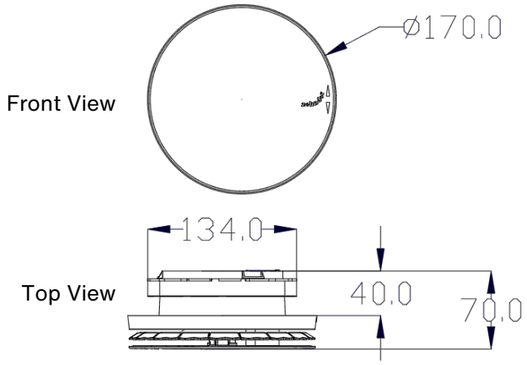

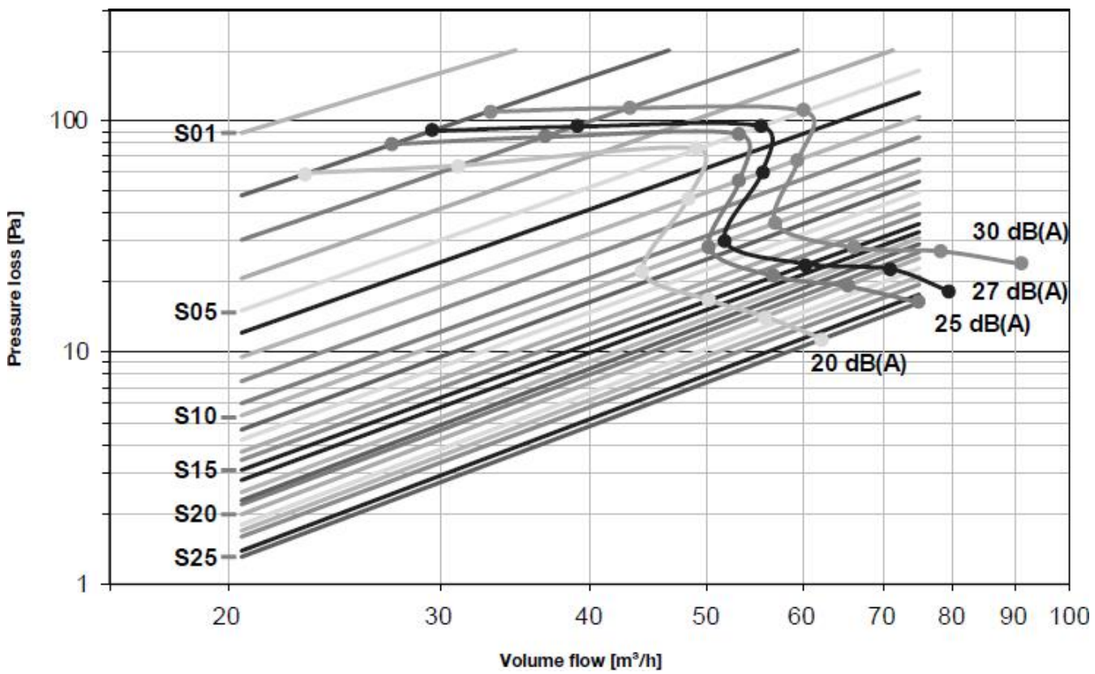

ComfoValve Luna E125, extract valve

Article number: 705 613 127 / 705 613 134 / 705 613 128 / 705 613 133 / 705 613 129

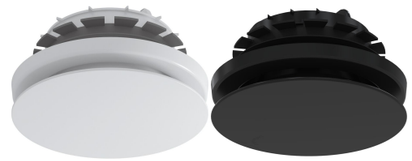

Technical Specification

Finish	White (RAL 9003) / Black (RAL 9005)
Quantity	1 / 1 / 1 / 1 / 24
Filter included	Yes / Yes / No / No / No
Spigot diameter	125 mm
Spigot length	72 mm
Facia diameter	170 mm
Weight	0.32 kg
Lockable	Yes
Adjustable	Yes
Spare parts	Replacement seal - 705 000 800 Replacement cover - 705 613 002 Filter - 990 320 031

Info

Minimal height of just 30 mm, regardless of the selected air volume setting
Tool-free installation, adjustment and maintenance
The inside of the valve can be labelled to document the selected setting
The air flow setting locking mechanism prevents unintentional changes to the settings, for example during cleaning
Discreet and timeless design
Rec. max flow 20.8 l/s (75 m³hr)

Dimensions

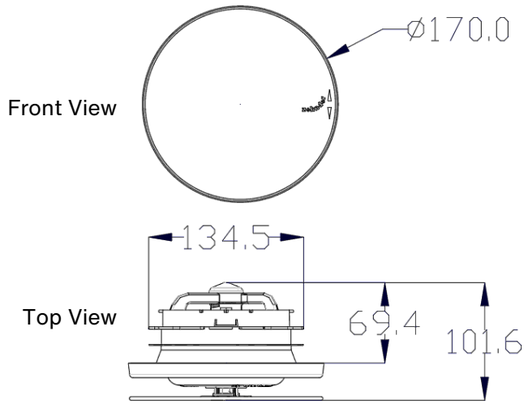

With filter

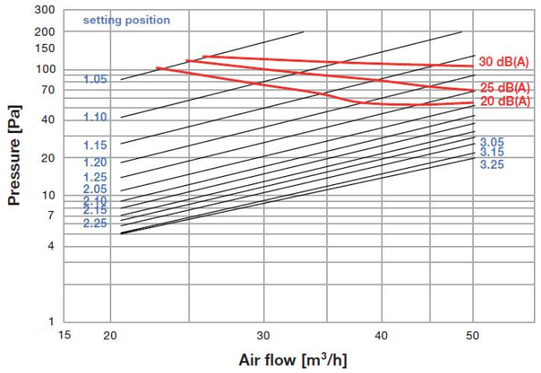

No Filter

