EU SCAN 1006-B

EU - ASSEMBLY AND INSTRUCTIONS MANUAL

SCAN 1006-B

SCAN®

ASSEMBLY AND INSTRUCTION MANUAL SCAN 1006-B

CONGRATULATIONS ON YOUR NEW SCAN WOOD-BURNING STOVE

You have purchased a product by one of Europe's leading manufacturers of wood-burning stoves, and we are sure that you will have years of pleasure from your purchase.

To make the best possible use of your stove, it is important that you follow our advice and instructions. Read through this Assembly and Instruction Manual carefully before you start to assemble your stove.

SCAN 1006-B

CONTENTS

TECHNICAL DATA 4

Installation 4
Safety 4
Technical data 5
Type plate 7
Product registration number 7
Dimension sketch 8
Minimum distances 9

ASSEMBLY 10

Tools needed for mounting of the stove 10
Loose parts 10
Disposal of packaging 10
Additional accessories 11
Existing chimney and pre-fabricated element chimney 12
Connection between stove and steel chimney 12
Requirements for chimney 12
Requirements for insulated chimney 12
Room requirements 13
Load-bearing foundation 13
Floor plate 13
Safety distance 13
Storage of flammable material 14
Carrying capacity 14
Operating the door 15
Fitting the flue connection piece 15
Fresh air intake 16
Closed combustion system 16
Mounting with plinth 19
Wall-hung model 20
Dimensional drawings of the wall brackets 20
Mounting of the wall bracket 21
Mounting of combustion chamber 23
Adjustment of the door 25
Door (Self-closing) 25

INSTRUCTIONS FOR USE 26

CB-technology (Clean Burn) 26
Baffle plate 26
Primary air 26
Secondary air 26

INSTRUCTIONS FOR HEATING 27

Environmentally-friendly firing 27
Lighting 27
Continuous operation 28
Warning about over-firing 28
Using the stove in various weather conditions 28
Firing in the spring or autumn 28
General notes 28
The function of the chimney 29
Chimney fire 29

HANDLING OF THE FUEL 30

Selecting wood/fuel 30
Preparation 30
Storing 30
Moisture 30
Use of the following as fuel is illegal 30
Calorific value of the wood 30

MAINTAINANCE 31

Sweeping the chimney and cleaning the stove 31
Checking the stove 31
Servicing 31
Combustion chamber lining 31
Gaskets 31
Painted surfaces 31
Cleaning the glass 32
Removal of baffle plates and combustion chamber lining 32
Disposal of stove parts 32

TROUBLESHOOTING 33

WARRANTY 34

TECHNICAL DATA

INSTALLATION

- All local regulations, including those referring to national and European Standards as well as the information provided in this assembly and instruction manual need to be complied with when installing the appliance
- When you install any kind of fireplace or stove, you must inform the local building and housing authorities. In addition you are obliged to have the installation inspected and approved by a local chimney sweep prior to commissioning
- To ensure best-possible functionality and safety for your installation, we advise you to call a professional fitter. Your Scan Dealer will be able to recommend a qualified fitter in your area. For information on Scan Dealers, please go to www.scan-stoves.com

SAFETY

Any changes made to the product by the dealer, fitter or user could result in the product and safety functions not functioning as intended. The same applies to the fitting of accessories or extra equipment not supplied by Scan A/S. This could also be the case if parts that are necessary for the operation and safety of the stove are dismantled or removed.

WARNING!

This product contains very strong magnets.

- When separating and putting together the magnets, we recommend that you let them glide on (or from) one another. In this way you avoid squeezing your fingers and damaging the coating of the magnets
- Electronic components should be kept at a safe distance from the magnets to avoid them being influenced or damaged by the magnetic field (pacemakers, hearing aids, computers, watches, measuring instruments, floppy discs, credit cards, mobile phones etc.)

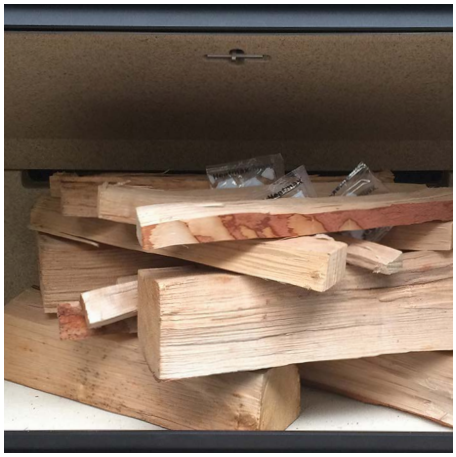

PLEASE NOTE!

YOU GET THE BEST USE OF THE STOVE BY USING A TOP-DOWN LIGHTING METHOD

SEE "INSTRUCTIONS FOR HEATING"

Test in compliance with EN 16510*			
	Classification of appliance	Type BF	
P_{nom}	Nominel heat output	7	kW
N_{nom}	Energy efficiency at nominel heat output	77	%
$N_{s\ nom}$	Seasonal space heating energy efficiency at nominel heat output	67	%
EEI	Energy efficiency index	102	
	Energy efficiency class	A	
	Fuel	Wood**	
	Fuel length, maximum	650	mm
$M_{h\ nom}$	Fuel consumption	1.9	kg/h
	Amount of fuel	1.5	kg
	Amount of fuel, maximum	2.5	kg
CO_{nom}	CO emission at 13% O_2 at nominel heat output	0.09 1123	% mg/Nm^3
$NO_{x\ nom}$	NO_x emission at 13% O_2 at nominel heat output	93	mg/Nm^3
OGC_{nom}	OGC emission at 13% O_2 at nominel heat output	53	mg/Nm^3
PM_{nom}	Dust emission at 13% O_2 at nominel heat output	26	mg/Nm^3
p_{nom}	Flue draught at nominel heat output	12	Pa
	Recommended sub-pressure in the connecting piece	18-20	Pa
	Required combustion air supply	23.0	m^3/h
$T_{fg\ nom}$	Flue gas temperature at nominal heat output	227	°C
$T_{s\ nom}$	Temperature in the flue connecting piece at nominal heat output	319	°C
T class	Chimney designation	T400 G	
$Ø_{f.g\ nom}$	Flue gas mass flow at nominal heat output	8.1	g/sec
V_h	Standing air loss	0	m^3/h
	Leakage before testing at a gauge pressure of 5 Pa	2.13	m^3/h
	Leakage before testing at a gauge pressure of 10 Pa	5.06	m^3/h
	Leakage before testing at a gauge pressure of 15 Pa	6.73	m^3/h
CON/INT	Continuous operation (CON)/Intermittent operation (INT)	INT***	
	Reaction to fire classification	A1	

* EN 16510 was carried out on the installation shown on page 9.

** Use only recommended fuels - designation I.

*** Intermittent operation in this context means normal use of a wood-burning stove. In other words, you should let the fire die down until only the embers are left before refueling.

Scan 1006-B - Test in compliance with EN 13240			
Combustion chamber	Ceramic stone	Vermi-culite	
CO Emission at 13% O_2	0,07	0,07	%
CO Emission at 13% O_2	887	905	mg/Nm^3
Dust @ 13% O_2	19	18	mg/Nm^3
No_x @ 13% O_2	95	95	mg/Nm^3
Efficiency	82	82	%
Energy efficiency index	109	109	
Energy efficiency class	A+	A+	
Nominel output	6	7	kW
Chimney temperature EN 13240	227	224	°C
Temperature in flue conn. piece	272	269	°C
Amount of smoke	5,6	6,6	g/sec
Sub-pressure EN 13240	12	12	Pa
Recommended sub-pressure in connecting piece	18-20	18-20	Pa

Basic technical data			
	Materials	Stainless steel Galvanised sheet Ceramic stone Chamotte Robax glass	
	Surface treatment	Senotherm	
d_{out1}	Connecting piece int. diameter for outside flue pipe	144	mm
d_{out2}	Connecting piece ext. diameter for outside flue pipe	148	mm
	Fresh air connection piece external diameter	100	mm
L	Overall dimensions (length)	479	mm
H	Overall dimensions (height)	472	mm
W	Overall dimensions (width)	799	mm
m	Mass (weight)	approx. 163	kg
	Weight big box	approx. 41	kg
	Weight little box	approx. 20	kg
m_{chim}	Maximum load of a chimney the stove may carry	120	kg

Minimum distances to combustible materials			
d_R	Back (uninsulated/insulated flue pipe)	150/50	mm
d_S	Sides (uninsulated/insulated flue pipe)	500/400	mm
$d_{S(C)}$	Sides - corner distance	50	mm
d_C	Ceiling	750	mm
d_P	Front	1400	mm
d_F	Front to the bottom front radiation area	0	mm
d_L	Front to the side front radiation area	0	mm
d_B	Below the bottom (not regarding feet)	0	mm
d_{B1}	Bottom edge of door to floor	490	mm
d_{non}	Minimum distances to non-combustible walls	50	mm

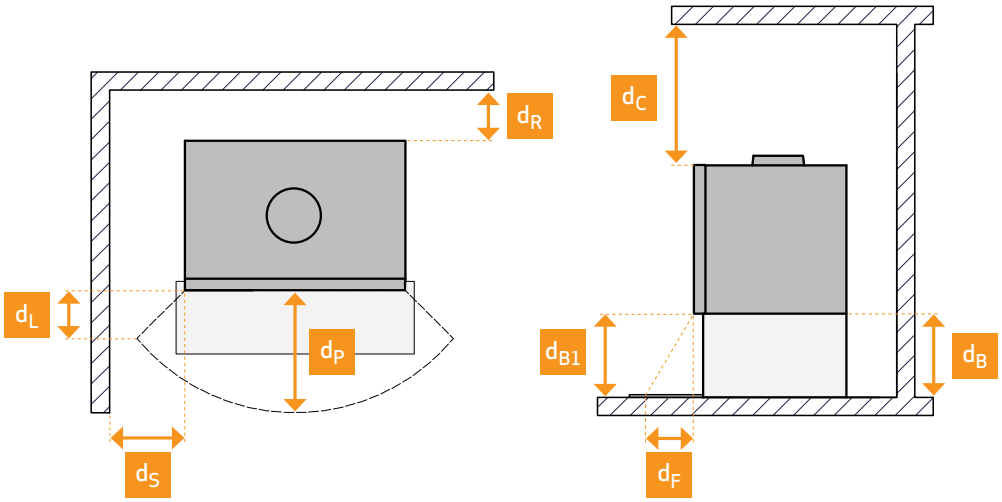

This stove is produced in accordance with type approval for the product, which also covers the product's Assembly and Instruction Manual. Read and follow the user operating instructions carefully.

The Declaration of Performance (DoP) is available from www.scan-stoves.com.

TYPE PLATE

All Scan wood-burning stoves are fitted with a type plate that specifies the approval standards and the distance to flammable materials.

The type plate is placed loose in the fireplace. It must be placed in a visible place on the stove.

Type plate

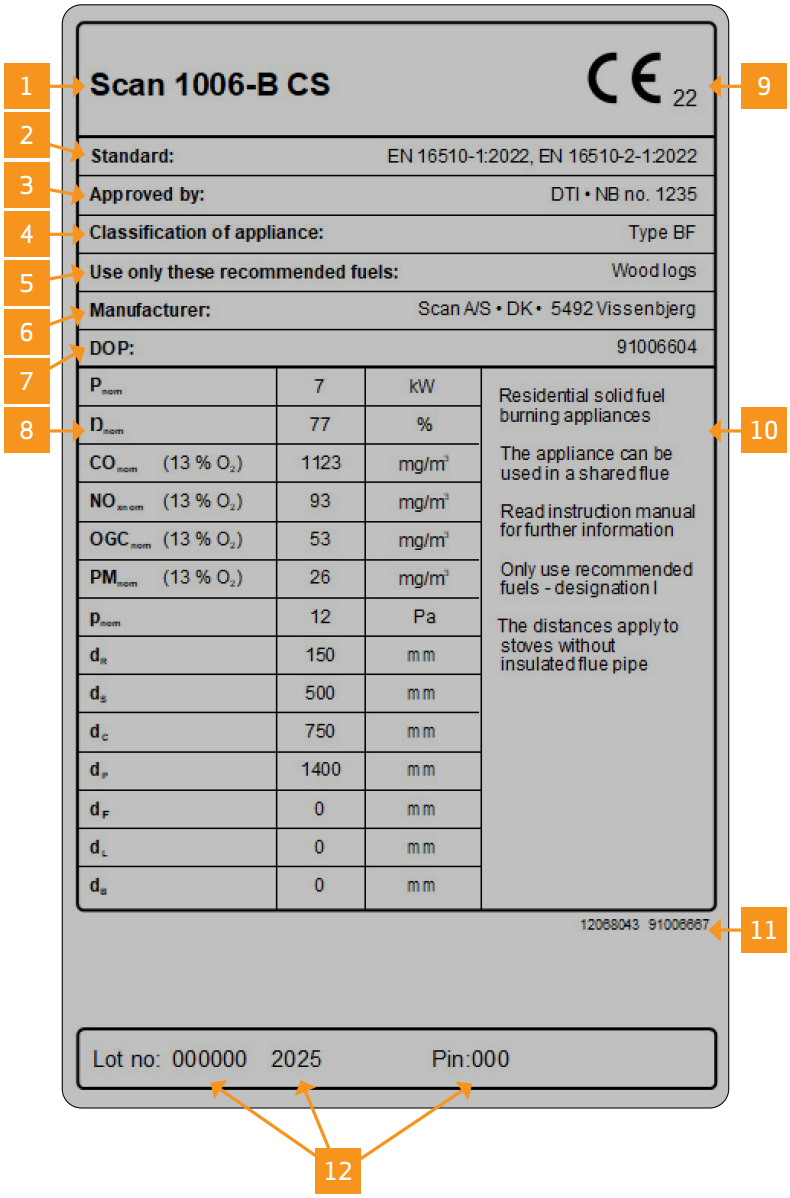

TYPE PLATE EXPLANATION

1. Type and/or the model number or designation to enable the appliance to be identified
2. Applicable standards
3. Name of test centre/certification number
4. Classification of appliance
5. Recommended fuels
6. Manufacturer's name and address
7. DOP document number
8. Table of values:

   P_{nom} - nominel heat output

   N_{nom} - energy efficiency at nominel heat output

   CO_{nom} - CO emission at 13 % O_2 at nominel heat output

   NO_{xnom} - NO_x emission at 13 % O_2 at nominel heat output

   OGC_{nom} - OGC emission at 13 % O_2 at nominel heat output

   PM_{nom} - dust emission at 13 % O_2 at nominel heat output

   p_{nom} - flue draught at nominel heat output

   Minimum distances to combustible material:

   d_R - back

   d_S - sides

   d_C - ceiling

   d_P - front

   d_F - front to the bottom front radiation area

   d_L - front to the side front radiation area

   d_B - below the bottom (not regarding feet)
9. CE mark of conformity - The digits indicate the year of issue of the certificate
10. Product specifications and instructions
11. Type plate number
12. Product registration number

PRODUCT REGISTRATION NUMBER

All Scan wood-burning stoves are provided with a product registration number. This is unique to your stove and may need to be referred to when you contact Scan A/S or your dealer, e.g. for service or ordering spare parts.

We recommend taking a picture of the type plate and saving it digitally, or writing the number down in a safe place – e.g. together with your housing documents.

Scan 1006-B

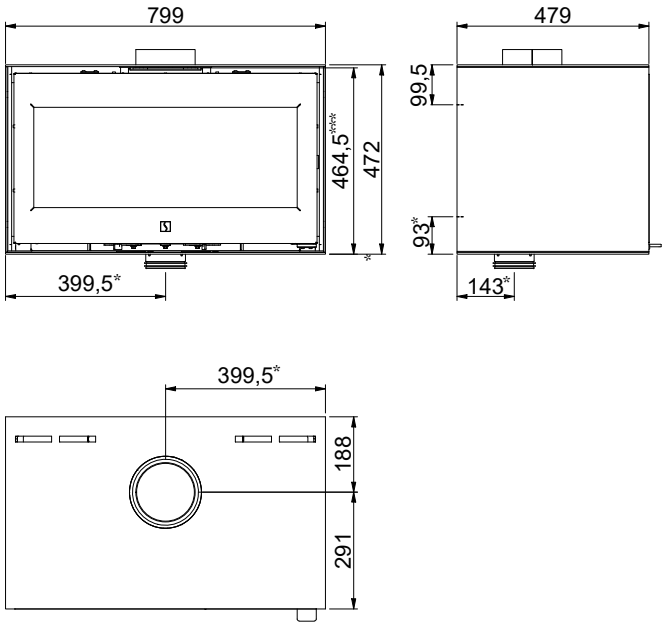

Scan 1006-B with plinth

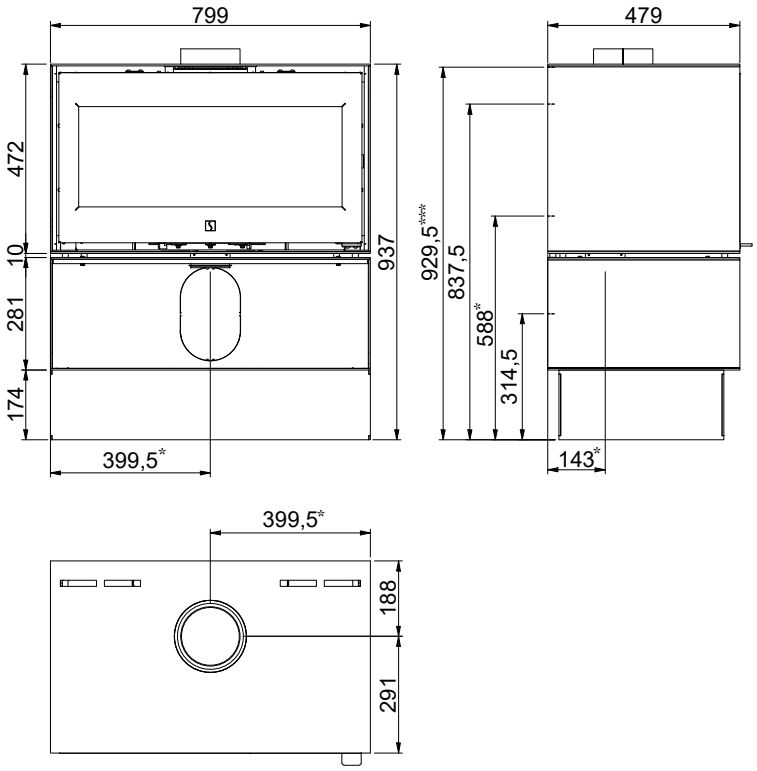

All distances are in mm.
All distances are minimum distances
* Connection of fresh-air intake Ø 100 mm
** Height to the beginning of flue connecting piece at top outlet

Minimum distance to flammable materials

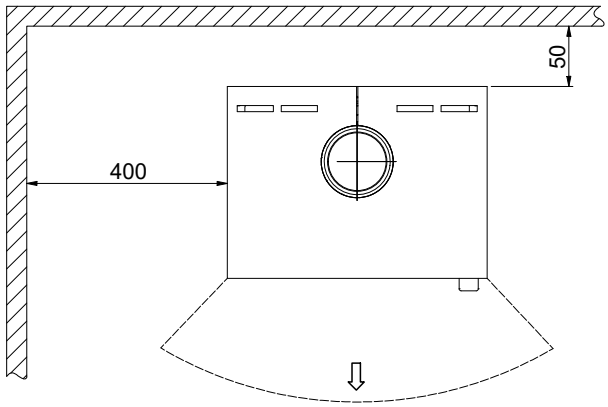

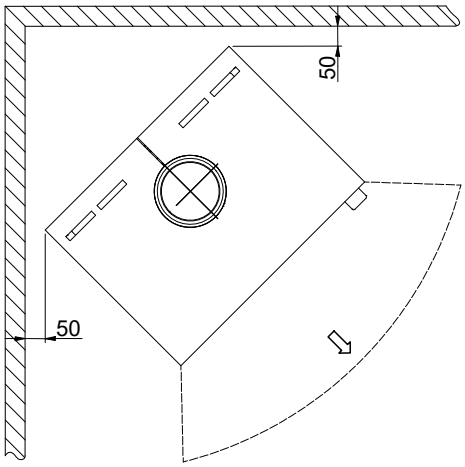

Minimum distance to flammable wall protected by a fire wall

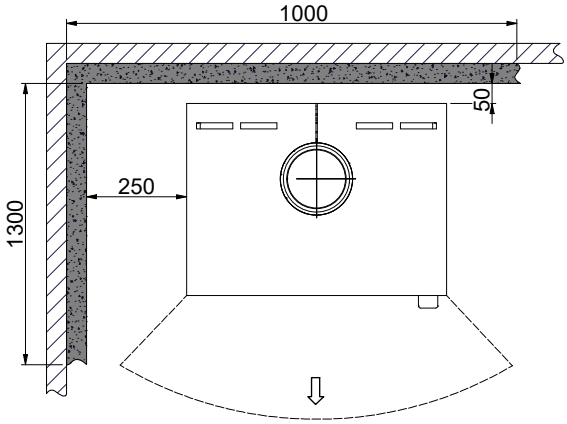

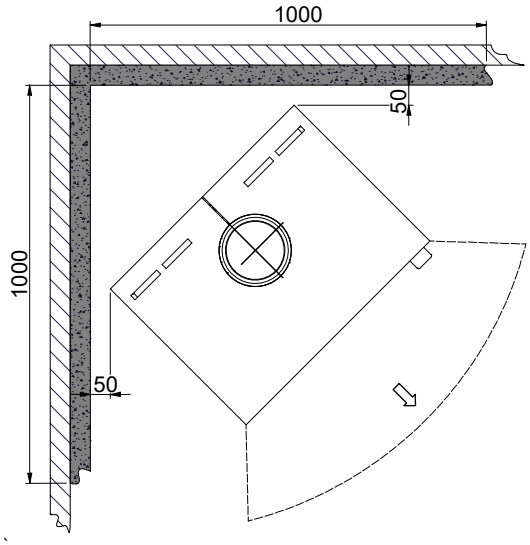

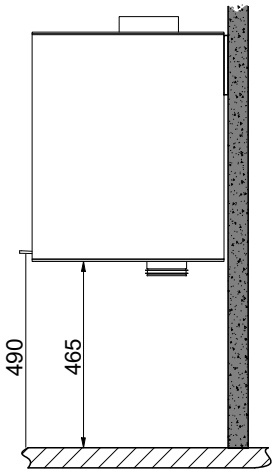

Flammable material

Fire wall, e.g. 50 mm Jøtul Firewall, 110 mm brick or other material with corresponding fireproof and insulating abilities

All distances are in mm.
All distances are minimum distances
These distances apply for an insulated flue pipe, all the way down to the stove
(The requirements to the chimney and the flue pipe in terms of safety distances must be met)

ASSEMBLY

TOOLS NEEDED FOR MOUNTING OF THE STOVE

- Spirit level
- Flat head screwdriver
- Combo wrench 8 mm
- Cross tip screwdriver
- Ø10 mm wall drill
- 2 allen keys (2,5 mm & 5 mm)

LOOSE PARTS

The trim and burn chamber plates (side and rear) are packed separately.

In the stoves combustion chamber you will find the following loose parts:

- Glove
- Baffle plate in steel
- Decor ring for top outlet
- Bag containing loose parts:
- Connecting pieces Ø144/148 mm
- Folder with labels

Ø100 mm sleeve with flange

4 x Allen screws M4x10 mm
(for fastening the sleeve Ø100 mm)

8 x 3 mm black self-adhesive gasket (2 m)
(Ø100 mm sleeve, connecting piece and cassette)

4 x flange nuts M5
(for fastening the connecting piece)

Combustion chamber package contains:

- Baffle plates
- 3 pins Ø6 x 40 mm
- Burn chamber plates (side and rear)

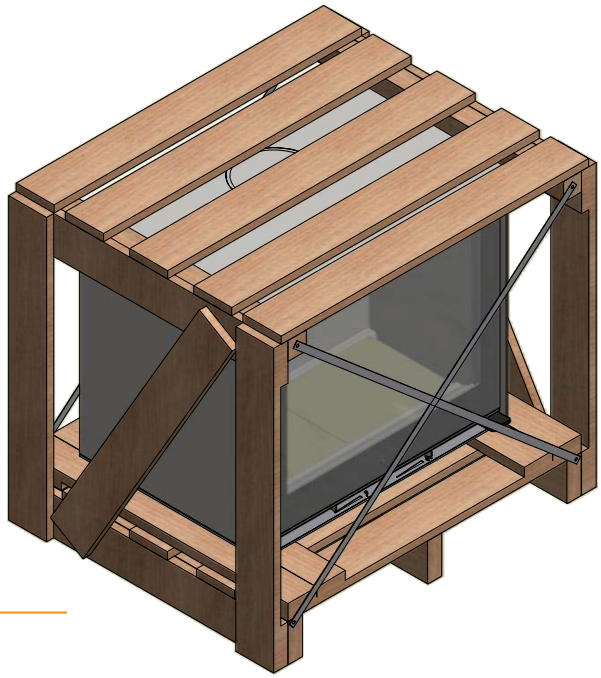

DISPOSAL OF PACKAGING

Check that the stove is not damaged before starting to install it.
Your Scan stove may come supplied with the following packaging:

Wood packaging	The wood packaging can be reused and after final use can be incinerated as a CO_2 neutral product or sent for recycling
Foam	Send for recycling or waste disposal
Plastic bags	Send for recycling or waste disposal
Stretch/plastic film	Send for recycling or waste disposal

ADDITIONAL ACCESSORIES

- Large module
- Large/small side module
- Large/small wall bracket
- Small floor plate (glass or steel)
- Magnets
- Large plinth
- Large/small plinth for side module
- Cover for fresh air inlet
- Large floor plate (glass or steel)

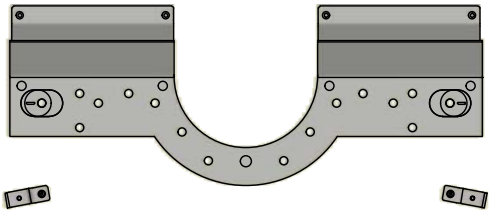

Large wall bracket

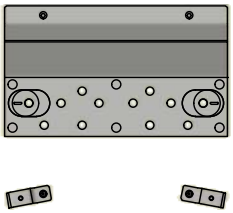

Small wall bracket

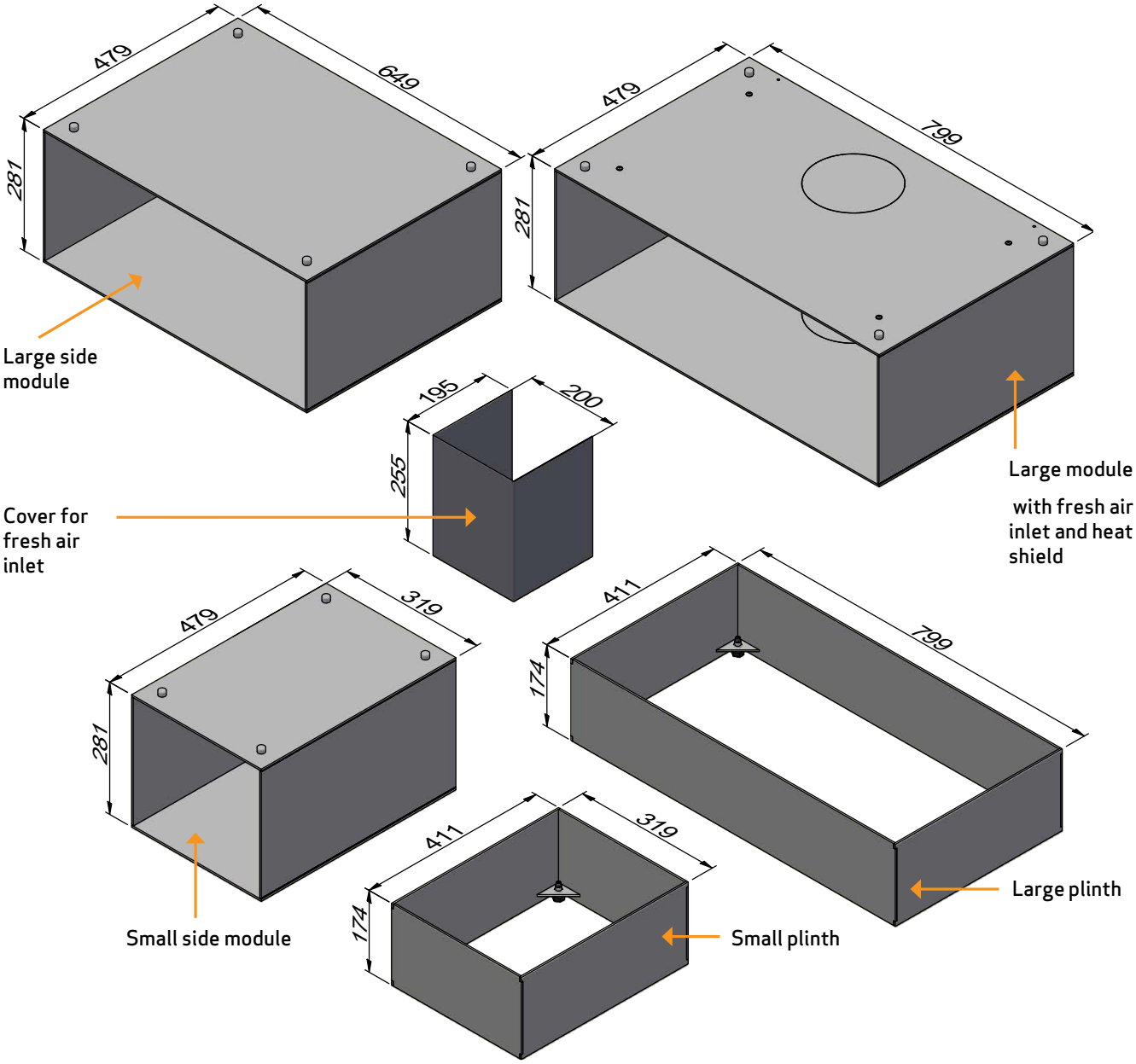

EXISTING CHIMNEY AND PRE-FABRICATED ELEMENT CHIMNEY

If you intend to connect your stove to an existing chimney, it makes sense to contact an authorised Scan dealer, or a local chimney sweep, for advice. These experts will also let you know if your chimney needs renovating.

- When connecting a pre-fabricated element chimney, follow the manufacturer's connection instructions for the relevant chimney type

CONNECTION BETWEEN STOVE AND STEEL CHIMNEY

Your Scan dealer, or local chimney sweep, can advise you on choosing a make and type of steel chimney. This ensures that the chimney will match your wood-burning stove.

REQUIREMENTS FOR CHIMNEY

The chimney must at least have a T400 designation, with G for the soot fire test. We recommend a chimney with a minimum internal diameter of 148 mm and a length of min. 4 metres.

If you opt to connect the stove with an elbow pipe, you should use a curved elbow, as this gives a better draught.

If you connect the stove with a sharp elbow pipe, the cleansing lid must be placed in the vertical part so that the horizontal part can be cleaned through here.

If the chimney is fitted with a smoke extractor, it must be possible to adjust it to a suitable draft.

The appliance can be installed in a shared flue, if the chimney is dimensioned for it.

The requirements to the chimney and the flue pipe in terms of safety distances must be met. The chimney shall be proven according to EN 13384-2:2015+A1:2019 depending on the individual situation on site.

- Choosing the wrong length or diameter of chimney could impair functionality
- Always comply exactly with the instructions provided by the chimney supplier

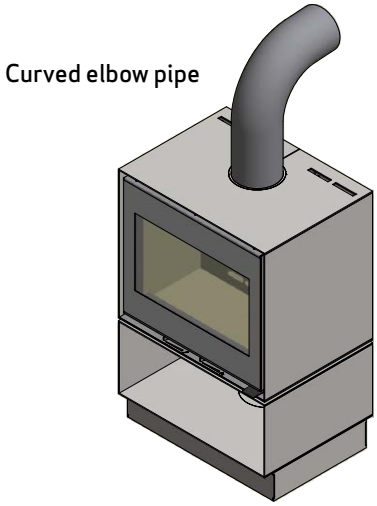

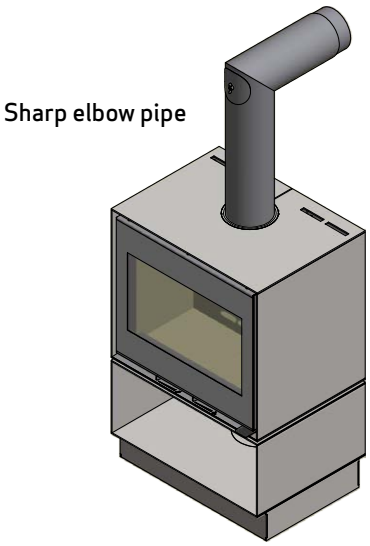

REQUIREMENTS FOR INSULATED CHIMNEY

The insulation level for insulated chimney: T400-N1-D-Vm-L50050-G100.
The air gap should be 10-15 mm.

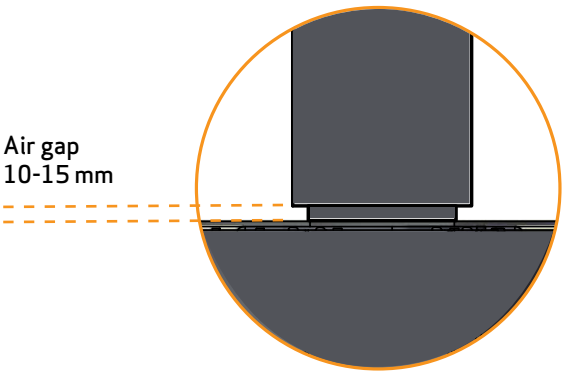

ROOM REQUIREMENTS

The stove must be installed in rooms with a good ventilation. A good ventilation is vital for the efficient operation of your stove.

We recommend installing smoke detectors in the home.

The distances specified in the manual only apply if you comply with the maximum amount of firewood. They only guarantee fire safety.

You should however assess whether furniture or other items might become excessively dry due to being too close to the stove. There is no guarantee that the present building materials can withstand the temperature in relation to visual changes.

- Check that Building Regulations and any local by laws are followed during installation

LOAD-BEARING FOUNDATION

All items in our product range come under the category of lightweight fireplaces and stoves and do not normally require any reinforcement of the beam structure. They can be positioned on ordinary beams/floor.

You should of course make sure that the foundation on which the stove is positioned can indeed support the weight of the stove and, where applicable, a steel chimney, if you have opted for this solution. In case of doubt about the carrying capacity of the floor, please consult a building expert.

FLOOR PLATE

If you are placing the stove on a flammable floor, you must comply with the national and local regulations on the size of any non-flammable subsurface required to cover the floor around the stove.

Your local Scan dealer can advise you on regulations concerning protection of flammable materials in the vicinity of your stove.

The floor plate's function is to protect the floor and flammable material against any sparks that may occur.

SAFETY DISTANCE

European, national and local regulations concerning safety distances for wood-burning stoves and flue pipes must be complied with.

If you connect the stove to a steel chimney, the safety distances of the steel chimney must also be respected.

The stove must be set up so that the stove itself, the flue pipe, and the chimney can all be cleaned.

There are no demands concerning the distance to non-flammable materials, but we recommend a distance of 50 mm in order to facilitate the cleaning of the stove, the flue pipes and the chimney and to prevent possible damages to the wall.

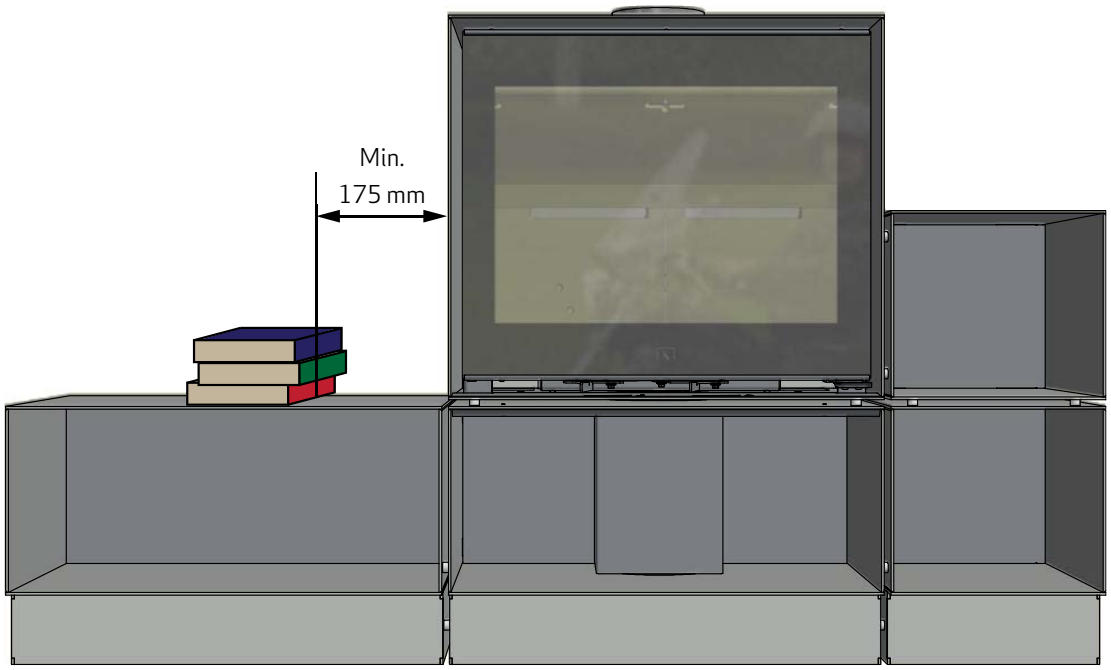

STORAGE OF FLAMMABLE MATERIAL

ATTENTION!! It is important to use the delivered magnets as distance pieces between the modules when using these in connection with flammable materials.

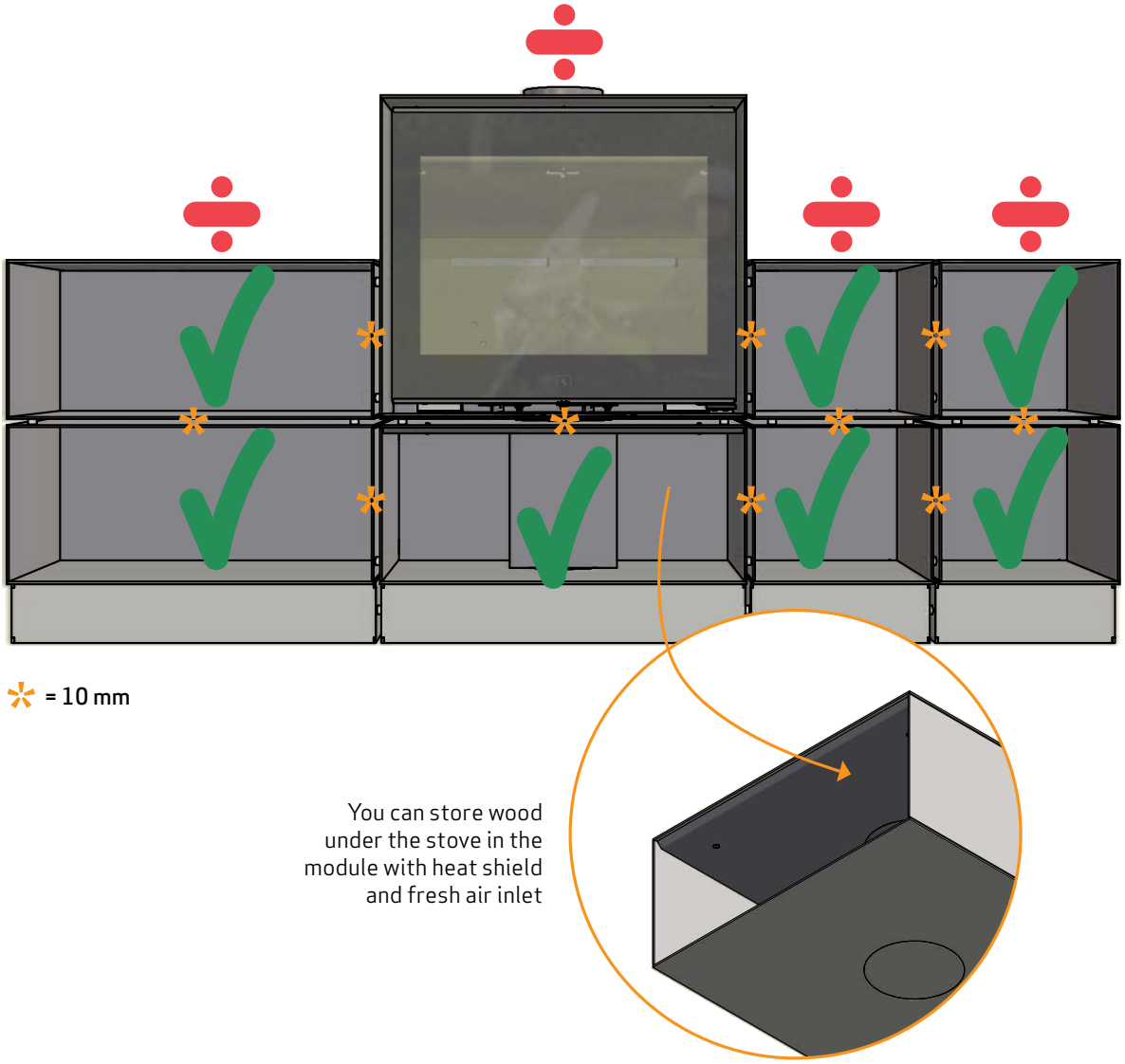

CARRYING CAPACITY

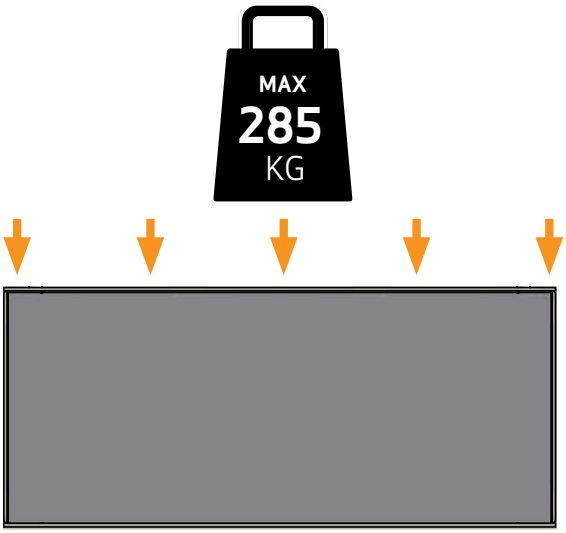

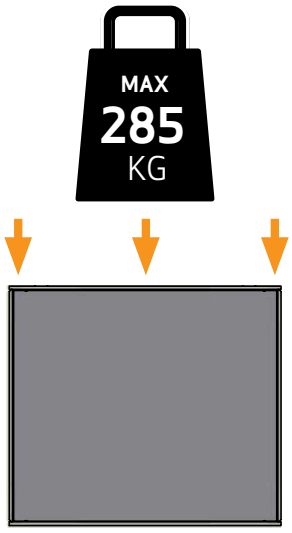

OPERATING THE DOOR

1. Push down the handle and the door will open

2. The door should be banged shut, as on a car. Grip the handle (hold in a horizontal position) and bang the door shut

FITTING THE FLUE CONNECTION PIECE

The stove is prepared for a top flue outlet from the factory, but the connection piece can be turned around for a rear outlet.

The flue connection piece (A), gasket for the flue connection piece (B), screws (C) and cover ring (D) can be found in the stove's combustion chamber.

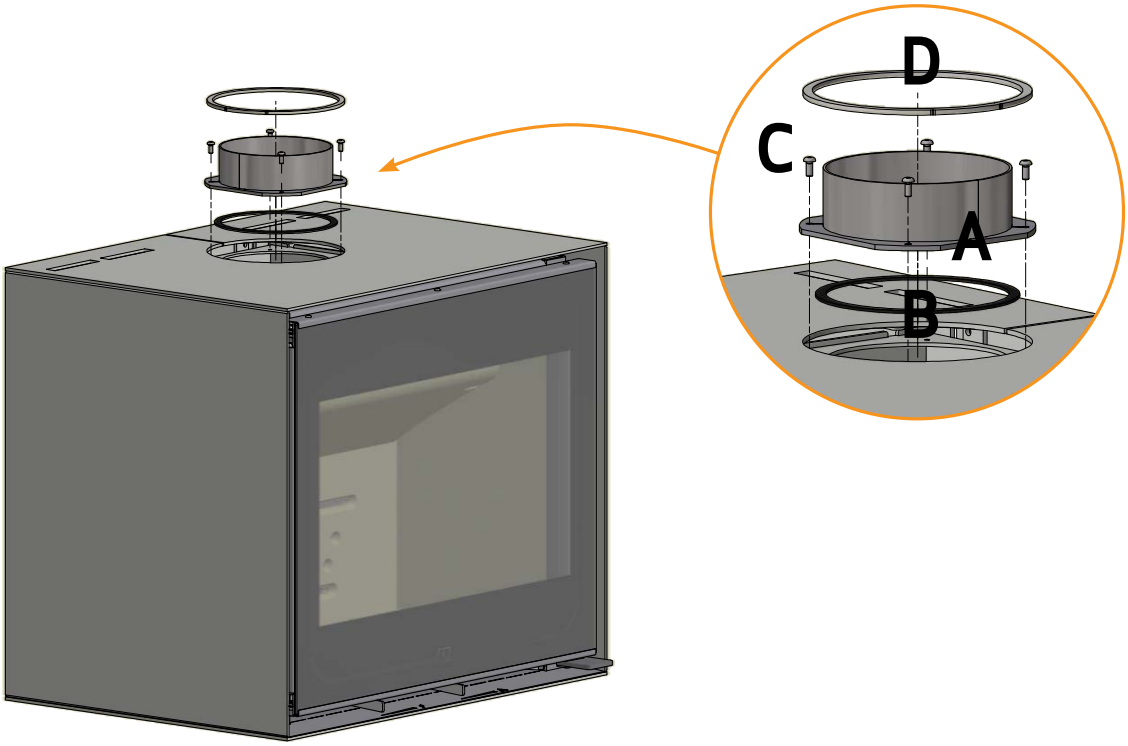

FRESH AIR INTAKE

In a well-insulated house, the air used up by the burning process has to be replaced. This particularly applies to houses with mechanical ventilation. There are different ways of making sure that an air exchange takes place. The most important thing is to ensure that there is a supply of air to the room where the wood stove is located. The external wall vent must be located as close to the wood stove as possible, and you must be able to close it when you are not using the wood stove. Beware that the valve in the outer wall cannot be covered by accident!

National and local building regulations must be followed with regard to the connection of fresh-air intake.

CLOSED COMBUSTION SYSTEM

You should use the closed combustion system for the wood-burning stove if you live in a newly-built, airtight home.
External combustion air is connected through a ventilation pipe via the wall or floor.

We recommend mounting a valve in the ventilation pipe in order to avoid condensate in the stove and the pipe system, which can be closed when the oven is not in use. It can also be an advantage to insulate the ventilation pipe.

Minimum Ø 100 mm ventilation pipe, maximum length: 6 metres with a maximum of 3 bends. We recommend smooth steel pipes.

NOTE: If the stove has a fresh air connexion or closed combustion, the ventilation pipe must be open, when the stove is in use!

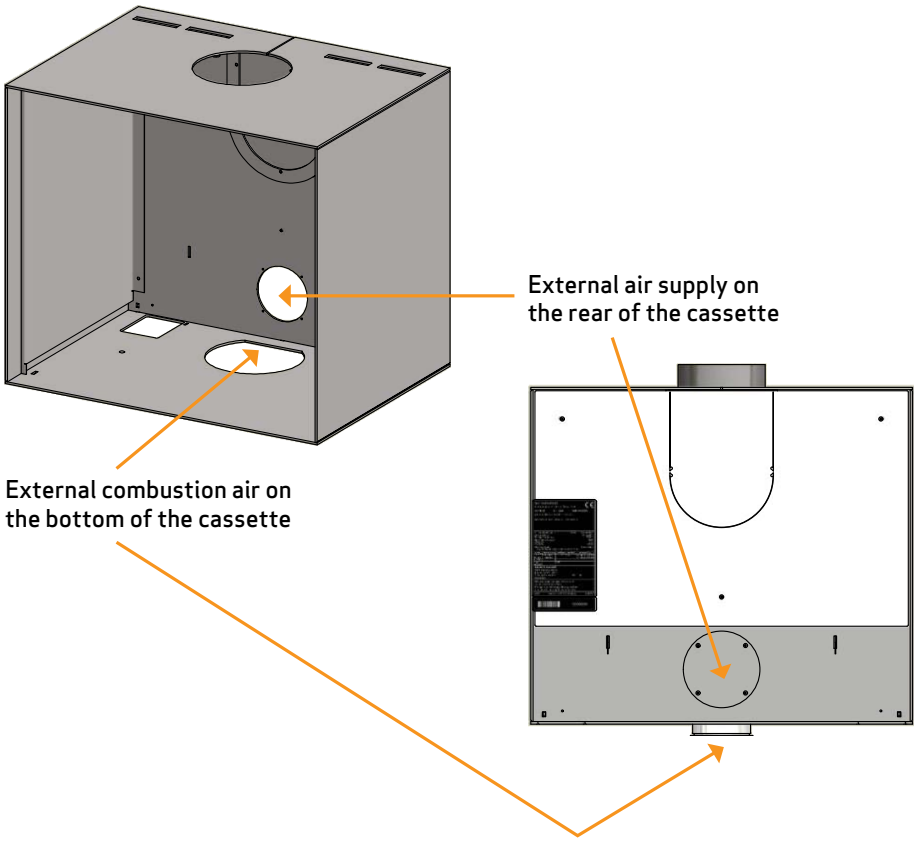

MOUNTING OF EXTERNAL AIR SUPPLY

Mount the stove in the cassette.

The combustion air box is usually fitted at the factory. It must **always** be mounted when connecting the stove with external air supply.

IMPORTANT: If the stove is placed on a flat surface without connecting external air supply, the cover on the back of the stove must be removed and the stove placed at least 50 mm from a wall.

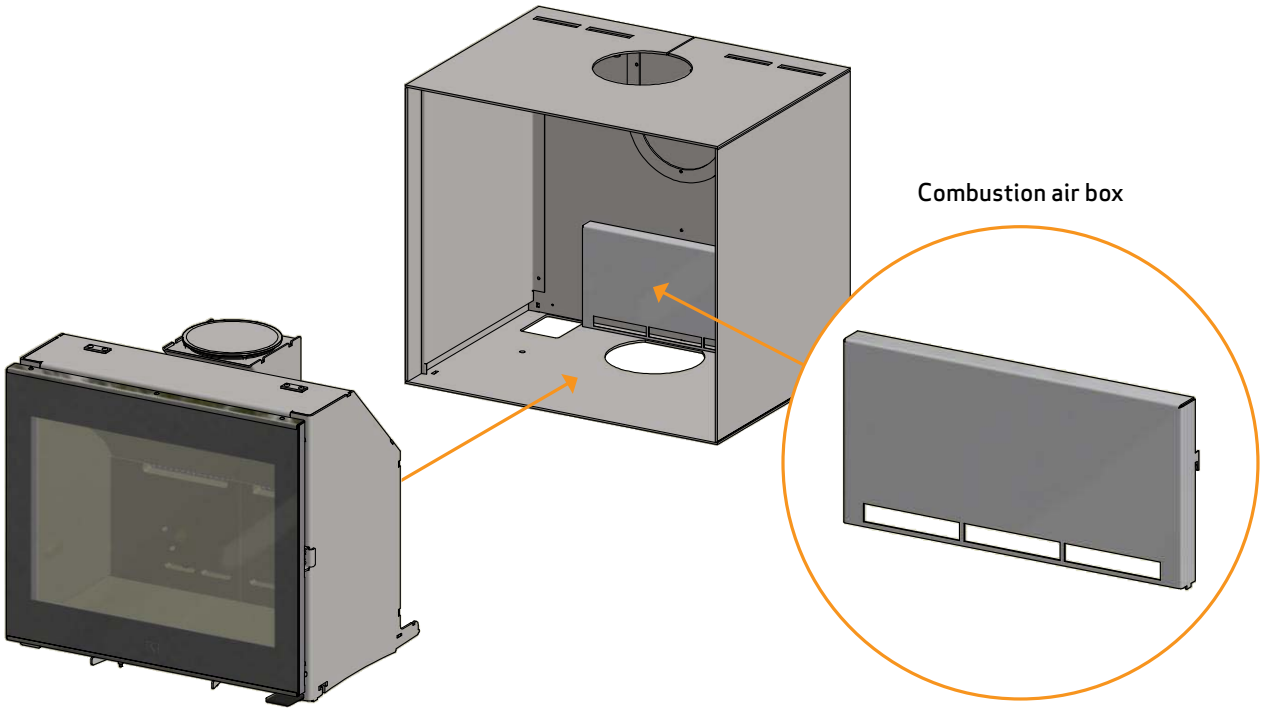

MOUNTING OF EXTERNAL AIR SUPPLY THROUGH THE BOTTOM OF THE CASSETTE

Mount the Ø100 mm sleeve

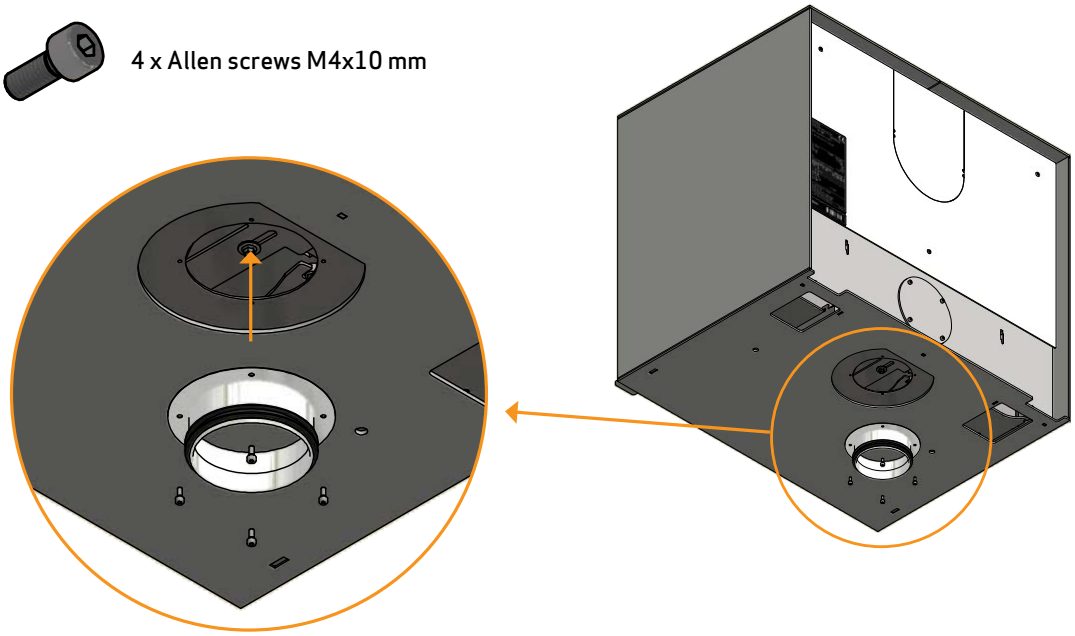

MOUNTING OF EXTERNAL AIR SUPPLY ON THE REAR OF THE CASSETTE

1

Dismount the cover plate at the rear and mount it in the bottom

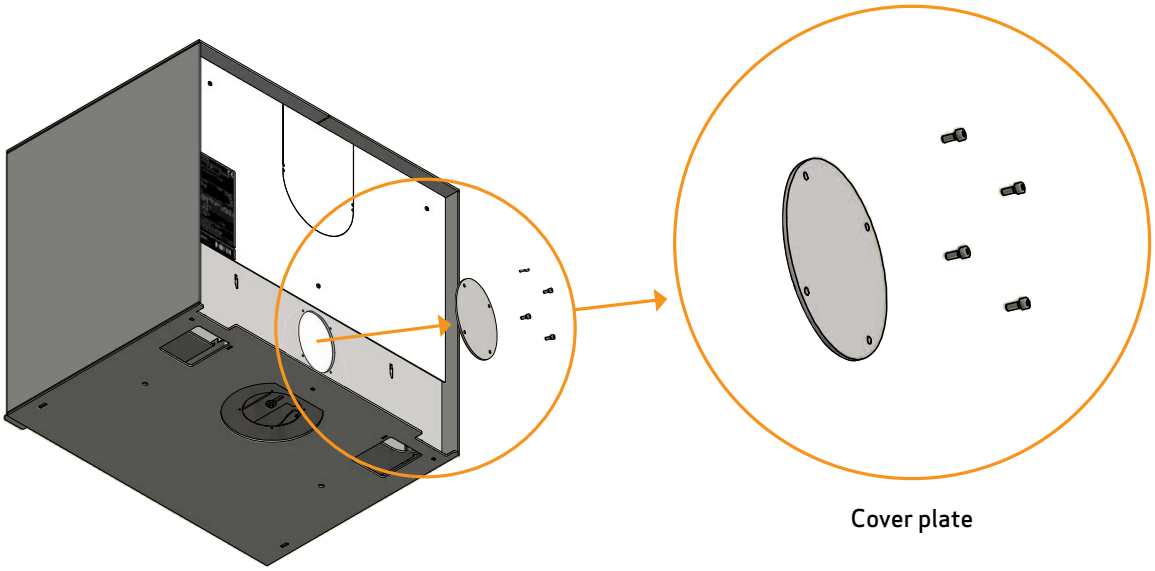

4 x Allen screws M4x10 mm

2

Mount the Ø100 mm sleeve

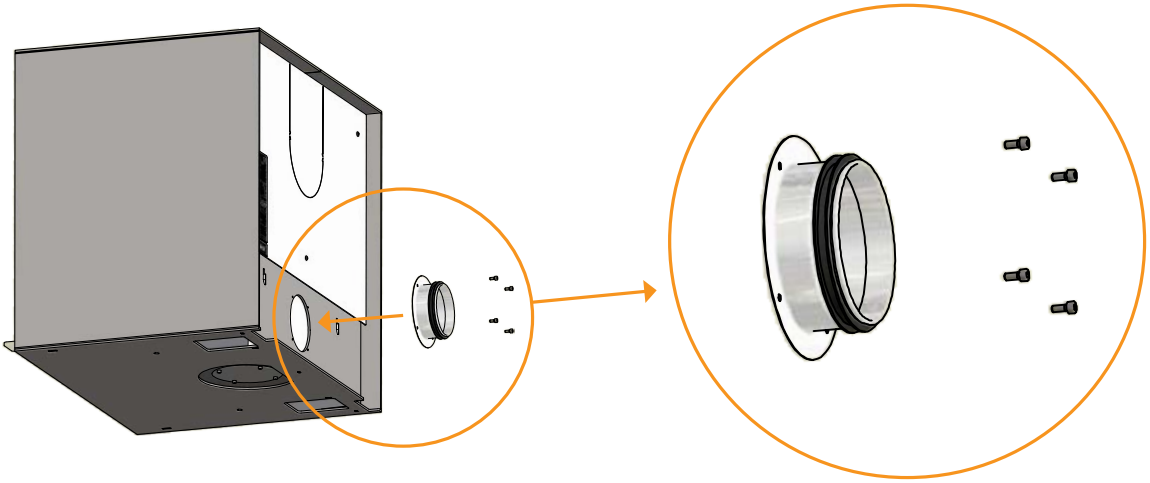

1

It is important to adjust the plinths before mounting the modules

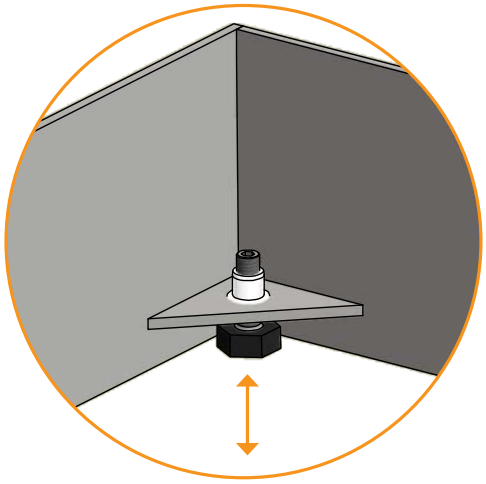

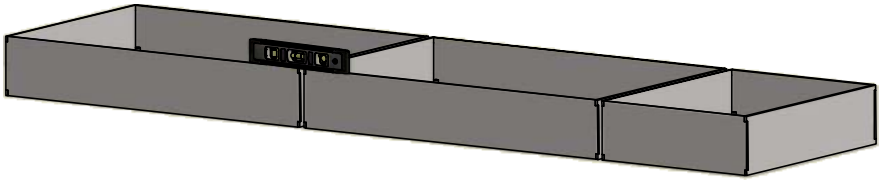

2

Place the magnets before mounting them. The magnets are to be found inside the plinth at the delivery.

First mount the module with fresh air inlet on the plinth and then the stove.

Please follow the order below A, B, C and D

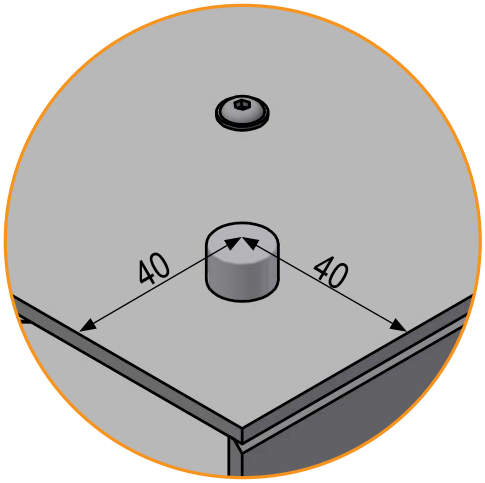

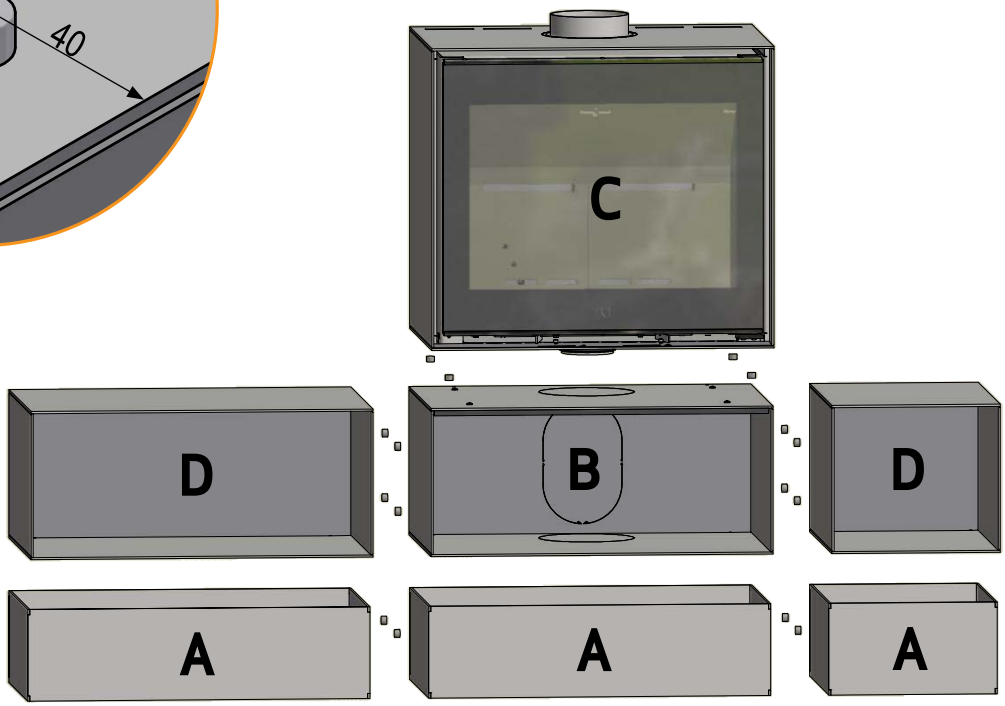

WALL-HUNG MODEL

Installation must be planned and executed in accordance with national and local building regulations.

The stove must only be fitted to a non-flammable wall. There must be no form of flammable component in the wall. In the case of thin walls, nor must there be any behind the wall. The load-bearing capacity of the wall must be checked under all circumstances.

To ensure correct installation we recommend that a building expert be commissioned to plan and outline the installation with a view to subsequent approval.

If a chimney is installed on top of a wall-hung model, the chimney must be fully self-supporting. It must not rest on the wood-burning stove. There must be a distance of at least 6 mm between the first section and the flange on the flue collar. Please consult a specialist.

Scan A/S disclaims all liability for the installation of wall-hung wood-burning stoves.

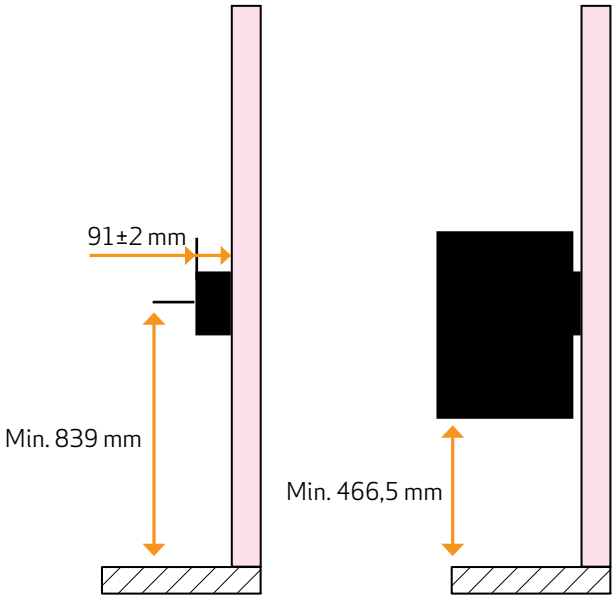

DIMENSIONAL DRAWINGS OF THE WALL BRACKETS

For wall installation we recommend using the wall brackets supplied.

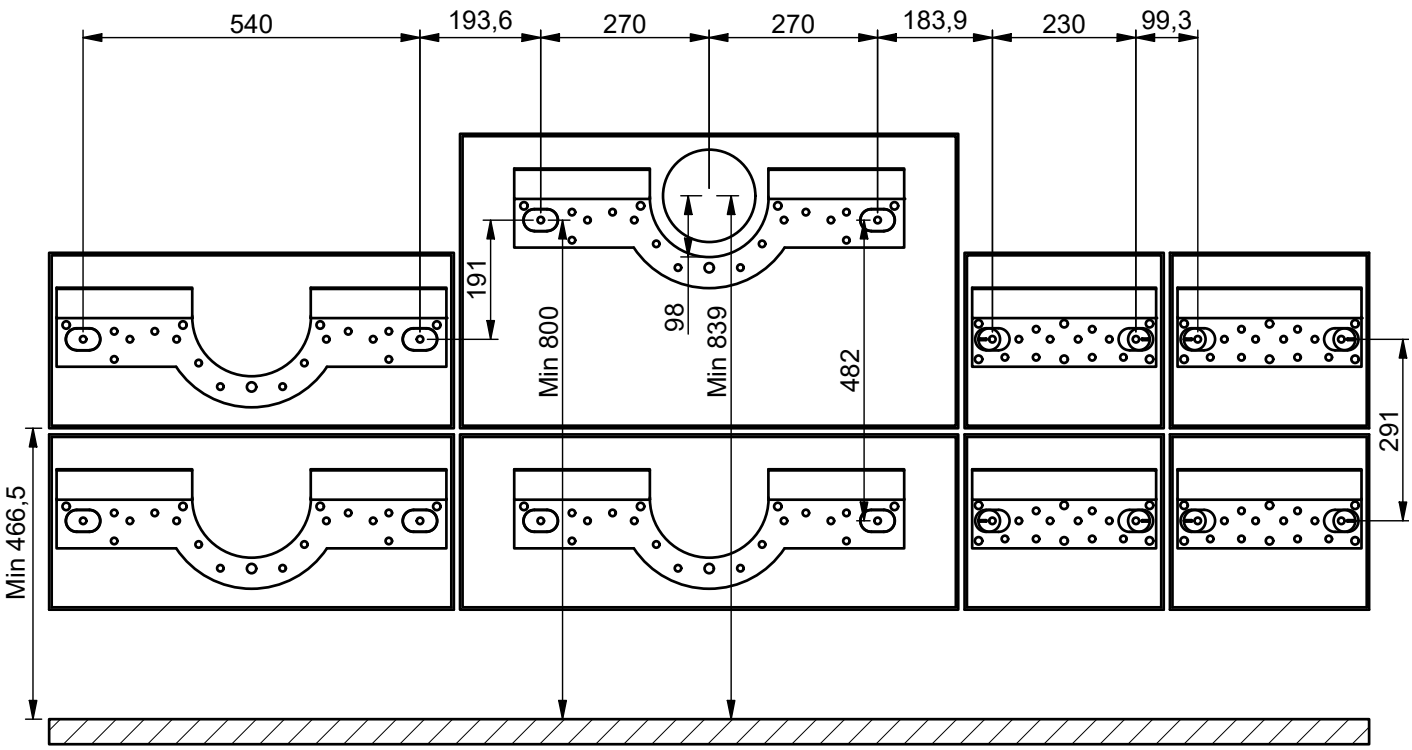

Flammable material

Fire wall, e.g. 50 mm Jøtul Firewall, 110 mm brick or other material with corresponding fireproof and insulating abilities

All distances are in mm

All distances are minimum distances

Content:

Large wall bracket

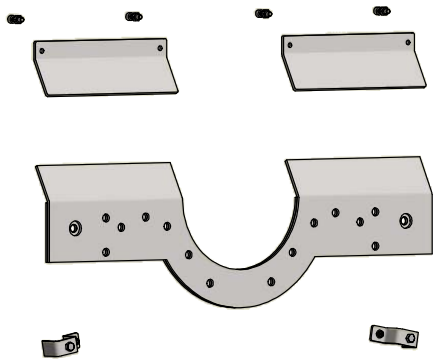

PLEASE NOTE: that one of the delivered type plate must be placed on the stove after dismounting the heat shield

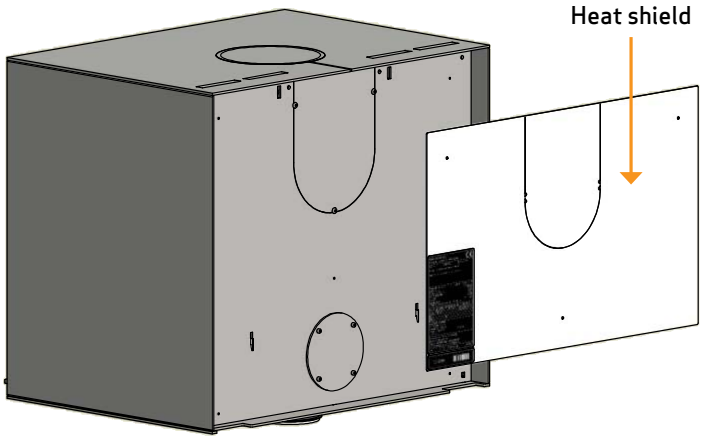

1

First dismount the heat shield at the rear. The heat shield is not used on the wall model

2

Pull the stove out of the module. Mount the fittings (A) at the top and the two adjustment fittings (B) at the bottom. If you want a rear outlet, the cover plate (C) on the back of the stove must be removed and placed in the top outlet. Fit the connecting piece with the supplied gasket and screws (D). The cover plate (E) at the rear of the module must also be removed. Place the type plate (F). Mount the fittings in the same way on the other modules

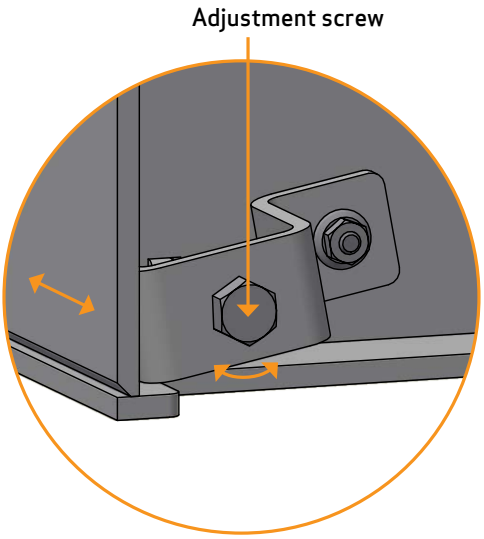

With this screw the stove can be adjusted

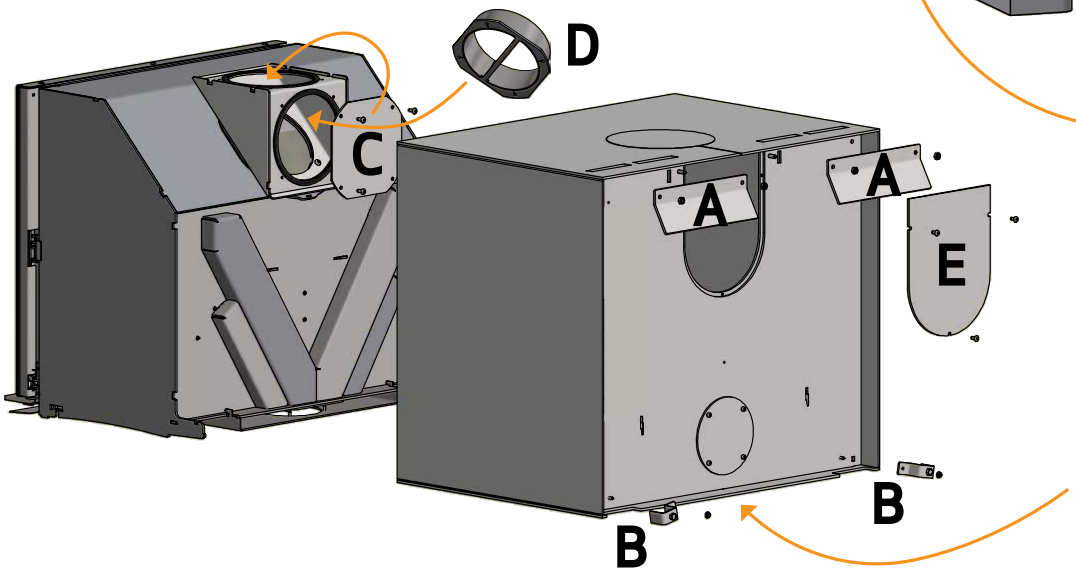

F

Place the delivered type plate in the bottom

MOUNTING OF THE WALL BRACKET

The smoke pipe should be lead 91±2 mm out of the wall in order for it to fit on the stove's connecting piece.
See dimensional drawing.

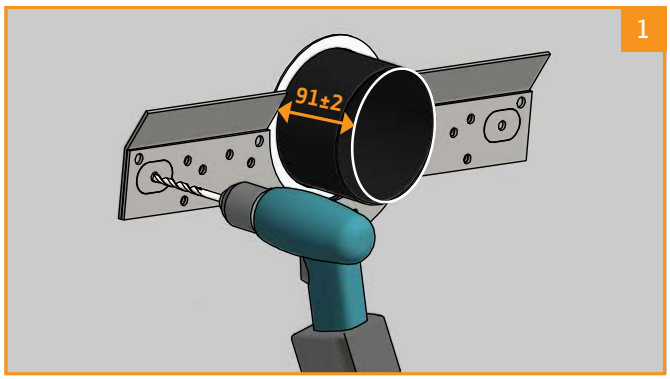

Drill the holes with the drilling template

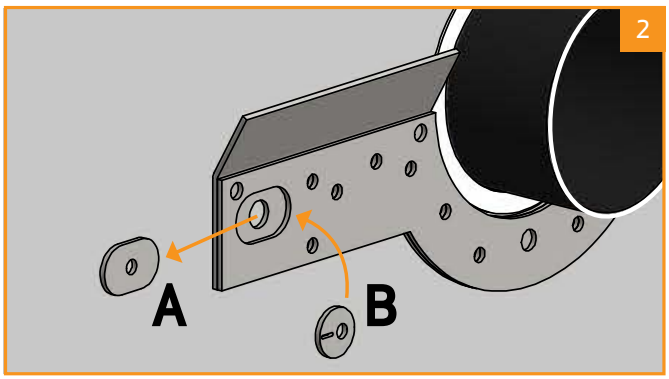

Replace the drilling template (A)
with the adjustment template (B)

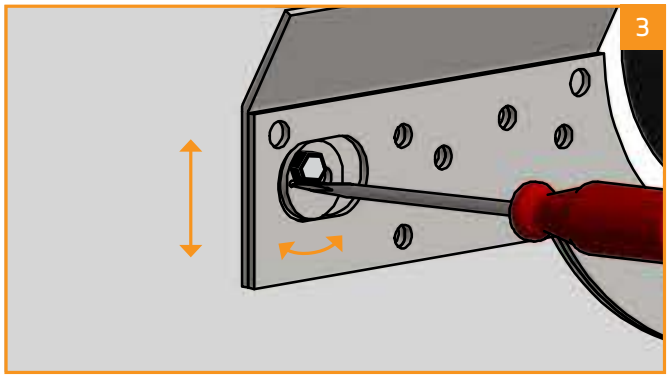

Can be adjusted up and down. Use a spirit level!

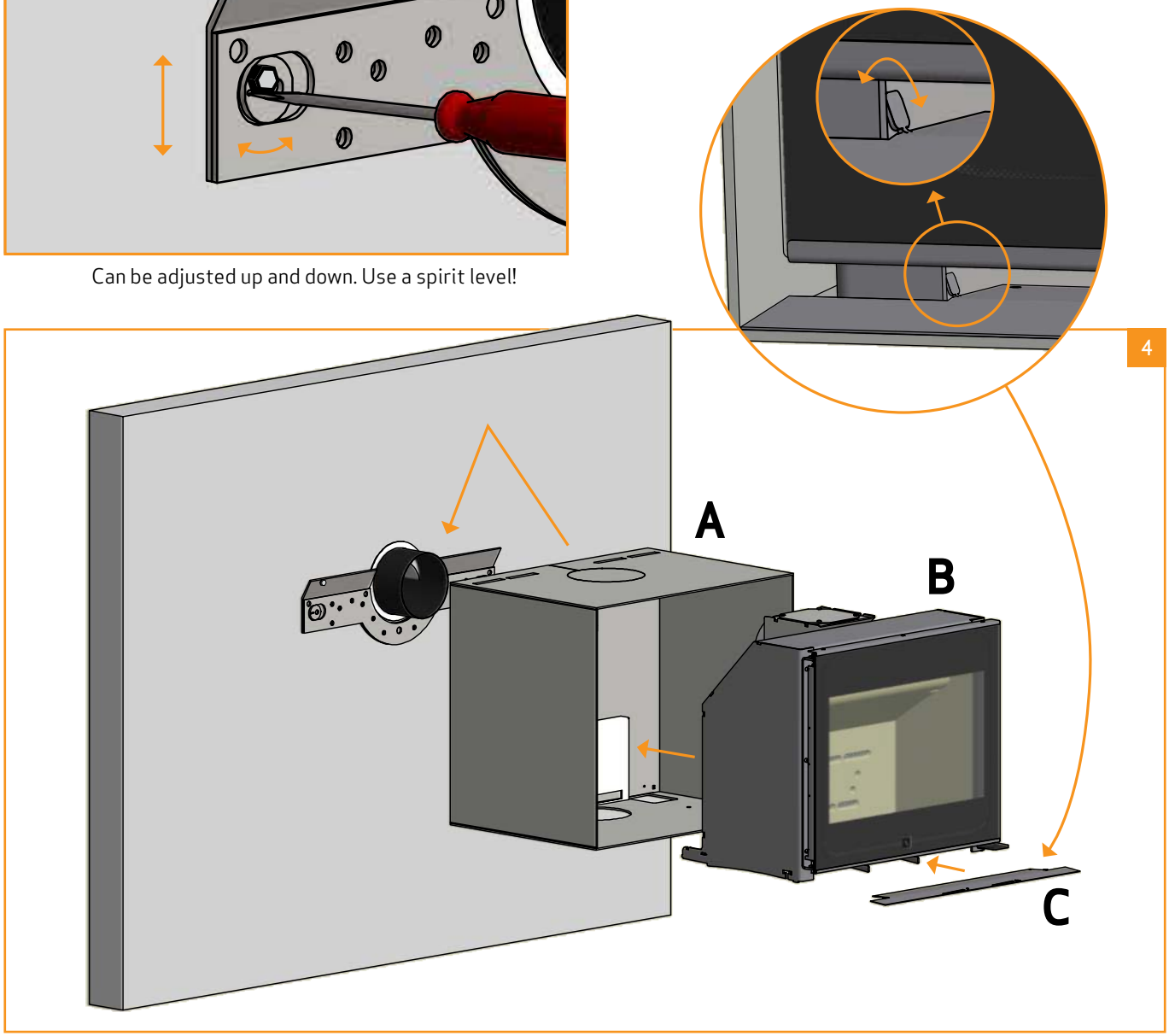

Mount the module (A) on the wall fitting. Place the stove (B). Put on the indicator plate (C)

1

Place the upper baffle plate in the top of the stove. It is important that the plate is placed correctly

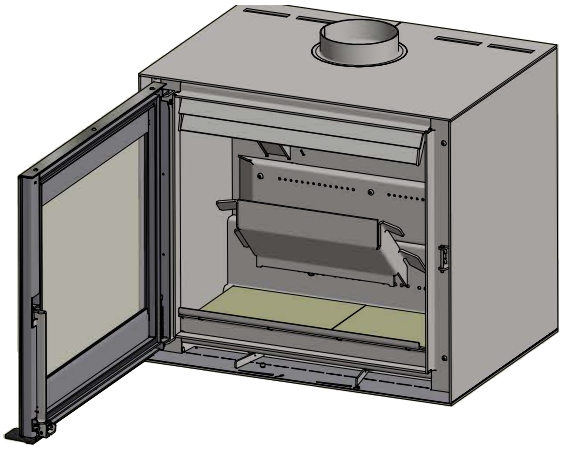

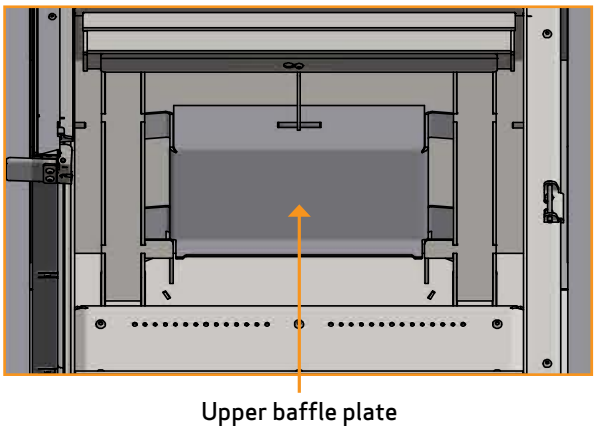

Note that the baffle plates are made of porous, ceramic material, and can break.
Exercise care when working

When installing the bottom stones follow instructions 2 and 3 - otherwise proceed to instruction 4

2

Place the log guard against the front of the insert

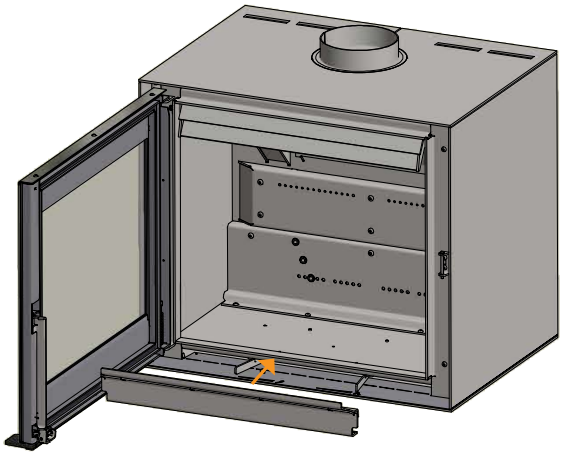

3

Place the bottom stones with the inclined edge turning to the rear and downwards

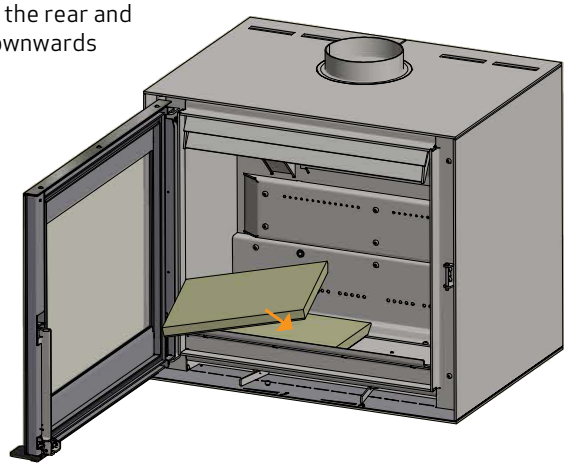

4

Mount the left burn chamber plate

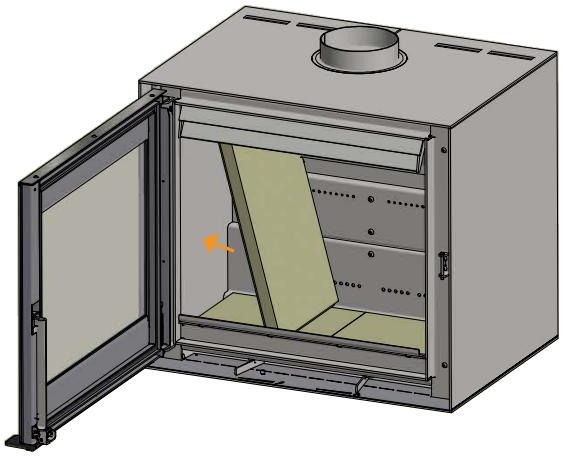

5

Mount the left rear plate

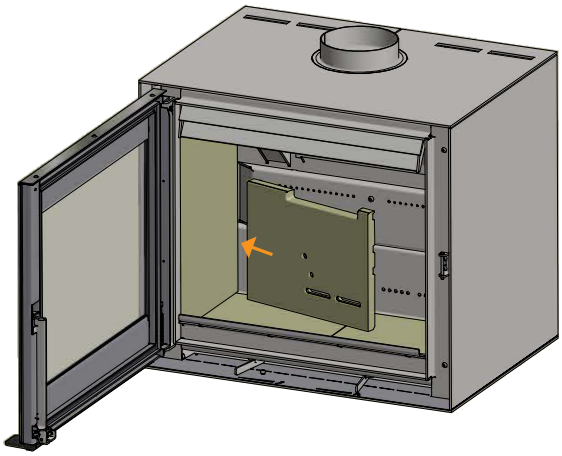

6

Mount the right burn chamber plate

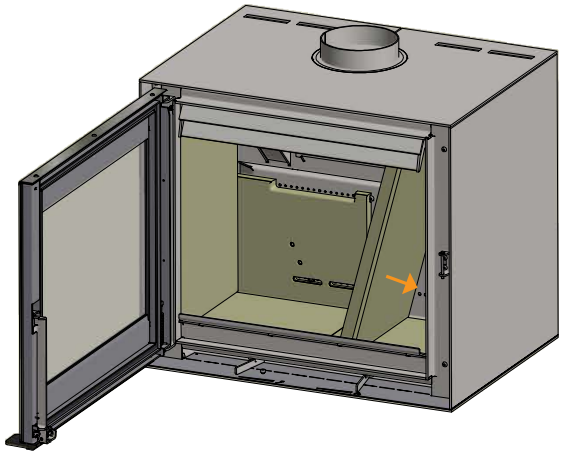

7

Mount the right rear plate. The rear burn chamber plates must be mounted so that the holes of the plates are placed precisely over the tertiary holes of the insert

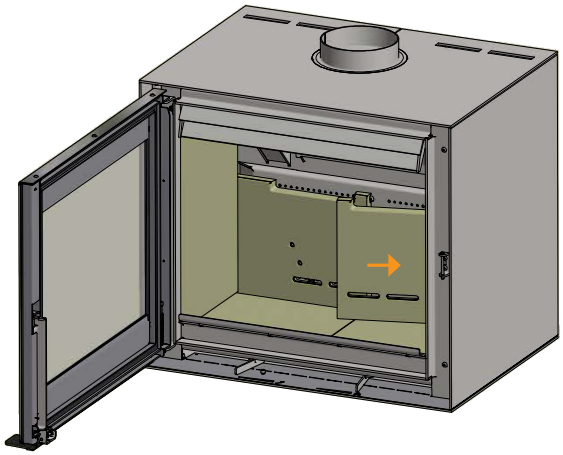

8

Mount the lower baffle plates. The baffle plates must be supported by the rear plates.
Mount the pins and put the plates in place

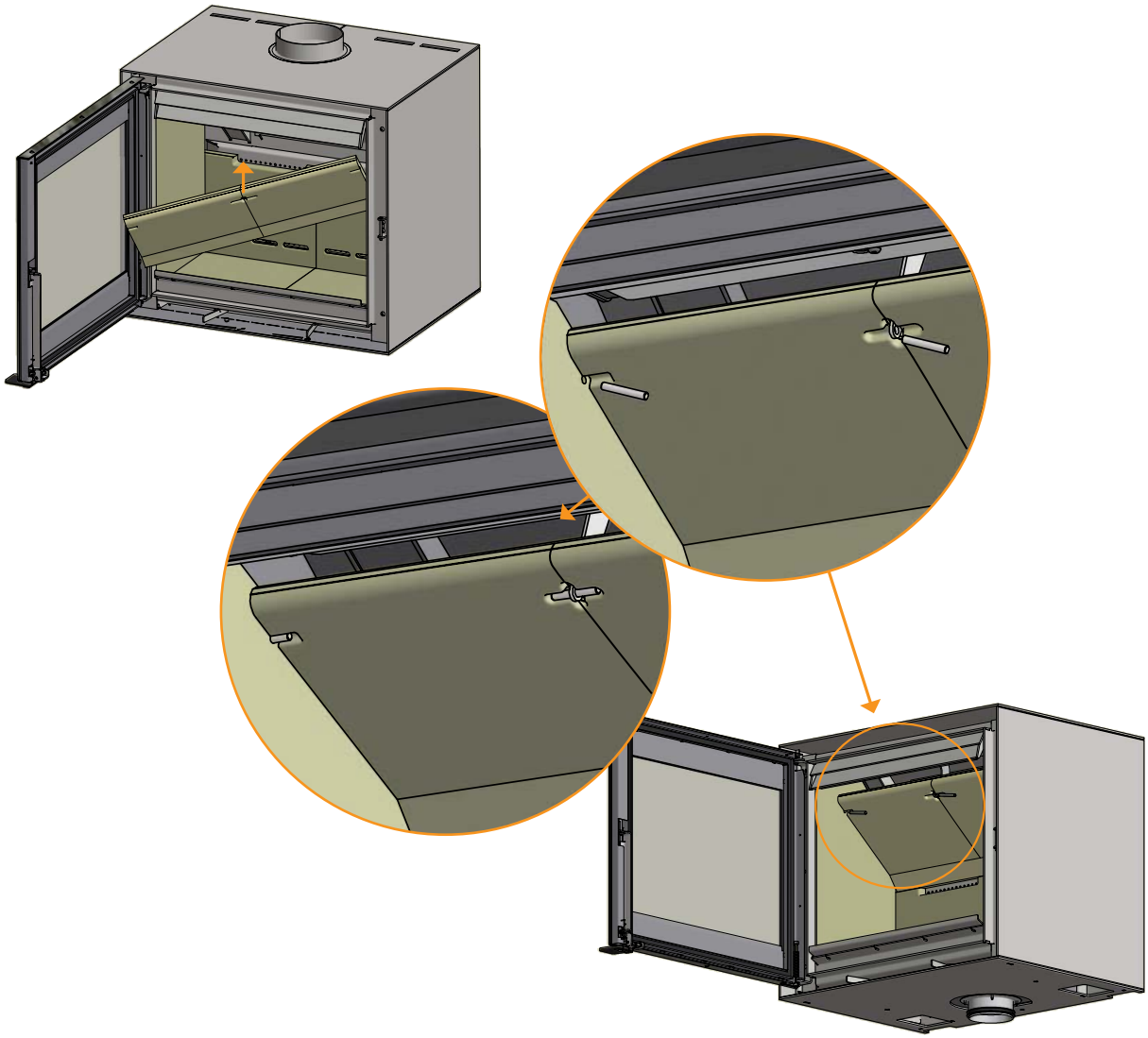

ADJUSTMENT OF THE DOOR

The door may "hang" a little over time. This can be solved by adjusting the adjustment screw of the door upwards using an 8 mm open-end spanner. The adjustment screw is placed at the top of the hinge as shown below.

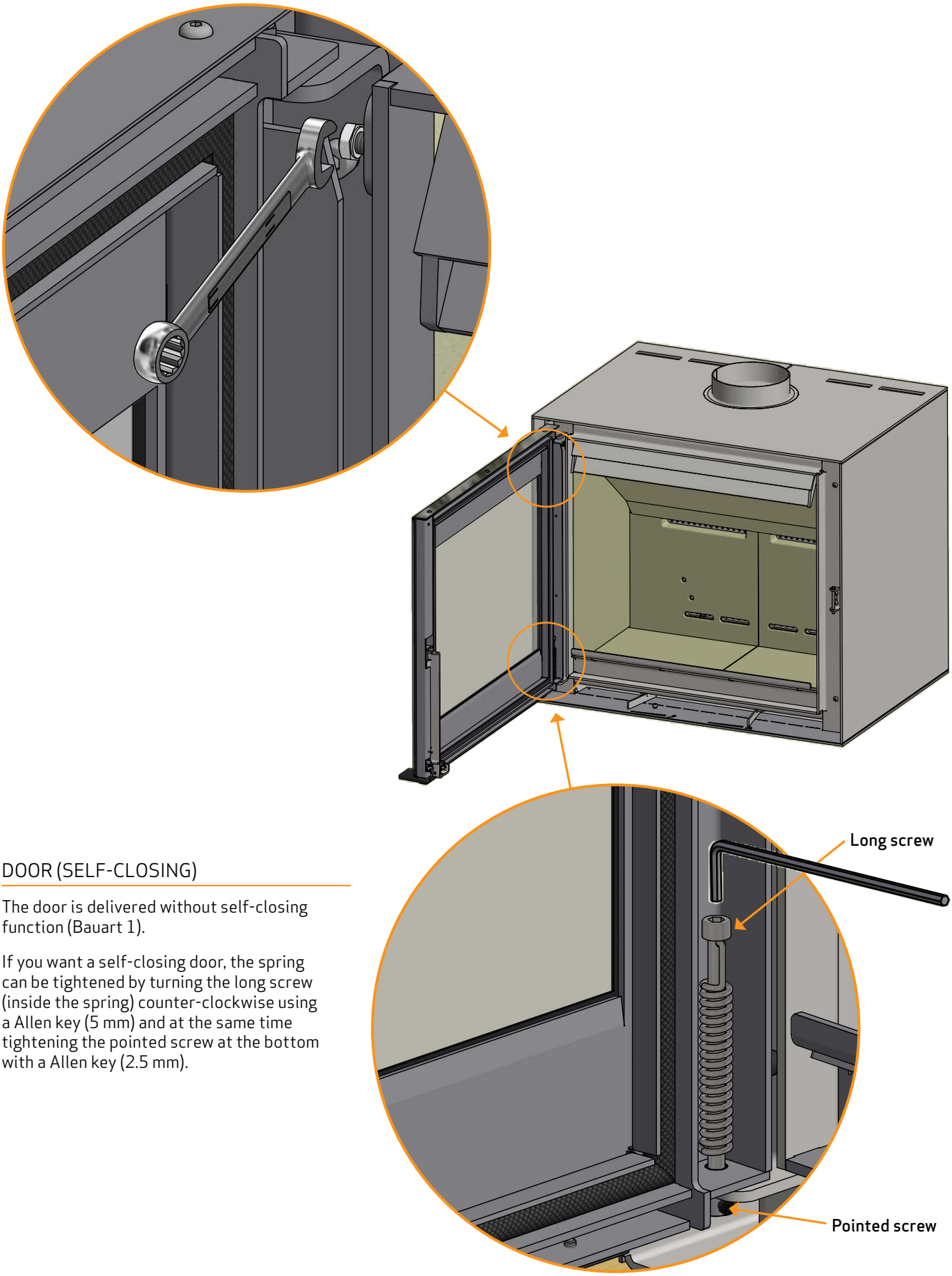

DOOR (SELF-CLOSING)

The door is delivered without self-closing function (Bauart 1).

If you want a self-closing door, the spring can be tightened by turning the long screw (inside the spring) counter-clockwise using a Allen key (5 mm) and at the same time tightening the pointed screw at the bottom with a Allen key (2.5 mm).

INSTRUCTIONS FOR USE

CB-TECHNOLOGY (CLEAN BURN)

The stove is equipped with CB technology. In order to ensure optimal combustion of gases released during the combustion process, air passes through a specially developed system of channels. The heated air is conducted into the combustion chamber through the holes in the rear lining of the combustion chamber and at the baffle plates. This airflow is controlled by the rate of combustion and cannot therefore be regulated.

NOTE: The wood must never be placed higher than the tertiary holes at the rear of the burn chamber (This does not apply at a cold start).

BAFFLE PLATE

The baffle plate is located in the upper part of the combustion chamber. The plate holds back smoke, making sure it stays inside the combustion chamber for a longer time before escaping through the chimney. This reduces the flue gas temperature as the gases have more time to dissipate heat to the stove.

The baffle plate must be removed for sweeping; see "Maintenance". Note that the baffle plate is made of porous, ceramic material, and is liable to break easily. You should therefore handle it with care.

The baffle plate is subject to wear and tear and not covered by the warranty.

PRIMARY AIR

The primary air is used when lighting the stove and must be closed after 10-20 minutes, when the fire has caught well. The primary air can be used continuously when using hard wood.

Settings for normal load: 0-30 %

SECONDARY AIR

Secondary air is pre-heated and fed indirectly to the fire. At the same time, the secondary airflow cleans the glass pane to avoid soot build-up. If you over-restrict the secondary airflow, soot can build up on the glass pane. The secondary airflow determines the heat output from your wood stove.

Settings for normal load: 50-90 %

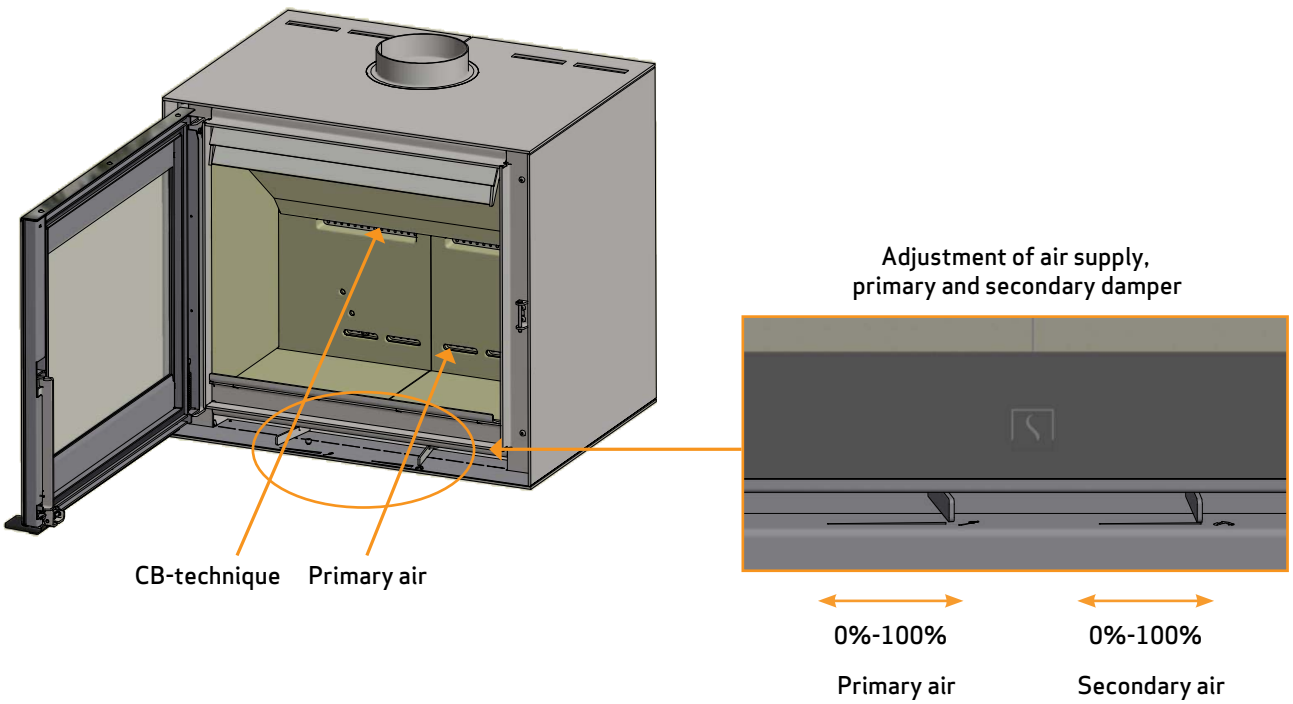

INSTRUCTIONS FOR HEATING

ENVIRONMENTALLY-FRIENDLY FIRING

Avoid turning down your woodburning-stove to the point where no flames are visible from the wood, as this leads to poor combustion and low efficiency. The gases released from the wood will not be burnt off due to the low temperature in the combustion chamber. Some of the gases will condense in the stove and flue system as soot, and this could lead to your chimney catching fire at a later point. The residual smoke which exits the chimney will pollute the surrounding area and cause an unpleasant smell.

LIGHTING

We recommend the use of fire lighters, or similar products. Using fire lighters helps light the wood more quickly and keeps the combustion process clean.

NOTE: Never use liquid lighting fuels!

The combustion chamber lining may turn black when the fire is lit.
It will burn clear again the next time wood is added.

NOTE!
See our video
about correct firing

"TOP DOWN" LIGHTING

"Top down" lighting is a more environmentally friendly way of lighting the fire and helps to keep the glass area as clean as possible.

Do as follows for a correct "top down" lighting:

- 4 pieces of wood approx. 25-40 cm long with a weight of approx. 0.6-0.8 kg per piece
- 15 thin pieces of firewood, with a total weight of approx. 0.8-1.0 kg
- 3-4 fire lighters

1. Place the pieces of wood, firewood and fire lighters in the combustion chamber as shown below
2. Set the primary and secondary air controls to maximum in the lighting phase. If the fire is too strong, you may throttle down the primary air damper (at the left)

NOTE: The wood must never be placed higher than the tertiary holes at the rear of the burn chamber (This does not apply at a cold start).

Place the fire lighters
between the upper sticks

CONTINUOUS OPERATION

It is important to obtain as high a temperature as possible in the combustion chamber. This results in best possible use of the stove and fuel, as well as achieving clean combustion. In this way you will avoid build-up of soot on the combustion chamber lining and glass pane. During operation, you should not see any smoke; just a movement in the air that indicates combustion is in progress.

- After completing the lighting phase, you should have a good layer of embers in the stove; you can then start operation of it properly
- Add two pieces of wood at a time: they should be about 1 kg in weight and about 25-40 cm long

NOTE: The wood must catch fire quickly. This is why we recommend setting the primary air flow fully open. Operating the stove at too low a temperature and with too little primary air can lead to gases igniting, which can damage the stove.

- When adding wood, always open the glass door carefully to prevent smoke escaping. Keep the door closed during the whole combustion phase
- Never add wood, while the fire is burning nicely

At the EN 16510-test the stove was fired as shown on the picture:

With three pieces of birch each 250 mm – 15-16 % wood humidity - with a total weight of 1.73 kg.

Primary air damper 25 % open – secondary air damper 90 % open.

Refuelling interval: 46 min

Criterion for the end of test cycle: 4,5-5 % CO^2

WARNING ABOUT OVER-FIRING

If the stove is continiously fired with larger amounts of wood than recommended and/or receives too much air, this can cause a heavy heat development liable to damage both stove and the surrounding walls. We therefore recommend that you always observe the max. recommended amount of fuel (See under "Technical Data").

USING THE STOVE IN VARIOUS WEATHER CONDITIONS

The way the wind affects the chimney can have a big impact on how your stove reacts under various wind loads; you may need to adjust the airflow to achieve good combustion. Fitting a damper in the flue pipe may also help, as it will allow you to regulate the draught under changing wind loads. The damper must not close more than 80% of the flue pipe.

Fog and mist can also have a big impact on chimney draught; you may need to use other settings for the combustion air to achieve good combustion.

FIRING IN THE SPRING OR AUTUMN

In the spring/autumn transition period, where there is less need for heating, we recommend you light the stove "top down" once, perhaps adding just two pieces of wood to ensure that the combustion chamber lining burns clean again.

GENERAL NOTES

PLEASE NOTE! Parts of the wood-burning stove, especially the outer surfaces, become hot during use. Due care should be exercised.

- Wear a glove when handling the stove
- Never empty ashes into a flammable container. Ashes can contain glowing embers long after you finish operating the stove
- Keep the combustion chamber closed except during ignition, refuelling and removal of residue material to prevent fume spillage
- Keep the air intake and output holes free from any accidental blokage while the stove is in use
- When the stove is not in use you can close the dampers to avoid a draught through the stove
- If the stove has not been used for some time, you should check the flue passageways for potential blockages before relighting
- We advise you strongly not to use the stove over night. The stove is not suited for this purpose

NOTE: Never place flammable material in the radiation zone of the stove!

THE FUNCTION OF THE CHIMNEY

The chimney is the wood-burning stove's motor; its performance determines how well your stove will work. The draught in the chimney creates negative pressure in the wood-burning stove. The negative pressure draws the smoke out of the stove and takes in air through the combustion air damper to fuel the combustion process. Combustion air is also used for the air wash system that keeps the window clear of soot.

The draught in the chimney is created by the difference in temperature inside and outside the chimney. The higher temperature difference, the better draught. This is why it is important that the chimney reaches operating temperature before you reduce the damper settings to restrict combustion in the stove (a brickwork chimney will take longer to reach operating temperature than a steel chimney). It is very important that the operating temperature is reached as quickly as possible on days when the draught in the chimney is poor due to unfavorable wind and weather conditions. You need to get a few flames going as quickly as possible. Chop the wood extra thin; use an extra fire lighter etc.

- After longer periods without use, you must check the chimney flue for blockages
- You can connect several units to the same chimney. You should however first check the relevant regulations in this respect

CHIMNEY FIRE

In the event of a chimney fire, keep the stove door and dampers on the stove closed. In an emergency, call the fire service.

- We recommend that you get a chimney sweep to check the chimney before using the stove again

HANDLING OF THE FUEL

SELECTING WOOD/FUEL

You can use any type of wood as fuel. However harder woods, such as beech or ash, are generally better for heating, as they burn more evenly and create less ash. Other woods, such as maple, birch and spruce, are excellent alternatives.

PREPARATION

The best fuel is obtained where the tree has been felled and the wood sawn and split before May 1st. Remember to cut the wood to match the size of the combustion chamber. We recommend a diameter of 6-10 cm. The length should be about 6 cm shorter than that of the combustion chamber to leave enough space for air to circulate. If the diameter of the wood is greater than the above, it should be split down its length. Wood that has been split dries faster.

STORING

You need to store the sawn and split wood in a dry place for 1-2 years before it will be dry enough to burn. Wood dries faster if you stack it in an airy place. Before using it, it is a good idea to store the wood for a few days at room temperature. Remember that wood absorbs moisture from the air during autumn and winter.

MOISTURE

To avoid problematic impact on the environment and to ensure optimum operating economy, the wood should be perfectly dry before it can be used as fuel. If you use wood that is too damp, most of the heat it produces will be used up in evaporating the water. The stove will accordingly not increase in temperature, nor emit heat to the room as a result. This is obviously poor economy, and it will cause soot build-up on the glass pane, in the stove and in the chimney. Operation using moist wood also pollutes the environment.

- Maximum wood moisture content should not exceed 20%. A moisture content of 15-18% will deliver best efficiency
- An easy way of checking wood moisture content is to knock the ends of the two pieces of wood together. If the wood is moist, the sound will be slightly muffled
- It is a good idea to take the wood into the house a day before it is to be used

USE OF THE FOLLOWING AS FUEL IS ILLEGAL

NOTE: It is absolutely prohibited to fire with painted, pressure impregnated or glued wood, or sea driftwood.

NOTE: Never use gasoline, gasoline-type lantern fuel, kerosene, charcoal lighter fluid, ethyl alcohol or similar liquids to start or "reignite" a fire in the stove. Keep all such liquids well away from the stove while it is in use.

NOTE: Nor should you ever burn chipboard, plastics, waste or treated paper. These contain substances that are hazardous to human health, to the environment, your stove, and your chimney.

In short - make sure you only use proper wood.

CALORIFIC VALUE OF THE WOOD

The various woods have different calorific values. In other words, for certain species of wood, you will need to use a greater quantity to achieve the same heating performance. This Instuction Manual assumes that you will be using beach, which has a very high calorific value and is also the easiest wood to get hold on. If you use oak or beech as fuel, you need to bear in mind that these wood types have a greater calorific value than for example birch. To avoid any risk of damage to the stove, you should therefore make sure to use less fuel in these cases.

Wood types	kg Drywood/m^3	Compared to beech
Hornbeam	640	110%
Beech/Oak	580	100%
Ash	570	98%
Maple	540	93%
Birch	510	88%
Pine	480	83%
Fir	390	67%
Poplar	380	65%

MAINTAINANCE

SWEEPING THE CHIMNEY AND CLEANING THE STOVE

Follow national and local regulations for sweeping the chimney. We recommend having the stove cleaned regularly by a chimney sweep.

Before cleaning the stove and sweeping the flue pipe and chimney, we recommend removing the baffle plates.
(See section "Removal of baffle plates and combustion lining")

NOTE: All service and reparation must be done, when the stove is cold.

CHECKING THE STOVE

Scan A/S recommends that you check your stove thoroughly after sweeping/cleaning. Check all visible surfaces for cracks. Check that all joints are tight and that the gaskets are correctly seated. Worn or deformed gaskets should be replaced.

SERVICING

We recommend that the stove is thoroughly serviced at least every two years by a qualified fitter. Remember only to use original spare parts.

The service should include the following:

- Lubricate hinges using copper grease
- Check the gaskets. Replace any that are broken or have turned hart
- Check the combustion chamber lining and the grate
- Check heat-insulating materials
- Check the locking device

COMBUSTION CHAMBER LINING

Slight cracks can appear in the combustion chamber lining due to moisture or sudden heating/cooling. These cracks have no influence on the output or lifetime of your stove. However, if the lining starts to crumble and fall out, you must replace it.

The combustion chamber lining is not covered by the warranty.

GASKETS

All wood-burning stoves have seals made of ceramic material fitted to the stove, the door and/or the glass. These seals are subject to wear and tear and must be replaced when necessary.

Gaskets are not covered by the warranty.

PAINTED SURFACES

Clean your wood-burning stove by wiping it down with a dry, lint-free cloth.

If the paint finish gets damaged, you can purchase repair paint in spray form from your Scan dealer. As slight differences in colour shade are possible, we recommend you spray a larger area to achieve a natural blend. For best results, apply repair spray when the stove is warm, but it should preferably not be scalding hot.

NOTE: Make sure to air the room thoroughly after applying spray paint.

CLEANING THE GLASS

Our wood-burning stoves are designed to prevent serious soot build-up on the glass. The best way to achieve this is to make sure you have a good supply of combustion air. It is also very important that the wood is dry and the chimney correctly dimensioned.

Even if you operate the stove in accordance with our instructions, a slight film of soot may still accumulate on the glass. You can easily remove this film by wiping the glass down with a dry cloth and then with a cloth dampened with glass cleaner.

- Please note that the glass cleaner is not to get into contact with the gaskets, as this can discolour the glass permanently
- The glass cleaner must not come into contact with the painted surfaces, as these can be damaged

REMOVAL OF BAFFLE PLATES AND COMBUSTION CHAMBER LINING

Be very careful when removing the baffle plate from the stove.

- Lift up the lower baffle plate, remove the pins and take out the baffle plate
- Lift the upper baffle plate to the back of the combustion chamber and remove it
- Lift the burn chamber side plates free from the bottom stones and take them out. Please note that the sides support the rear plates and that these may fall over, when the sides are taken out
- Take out the rear plates

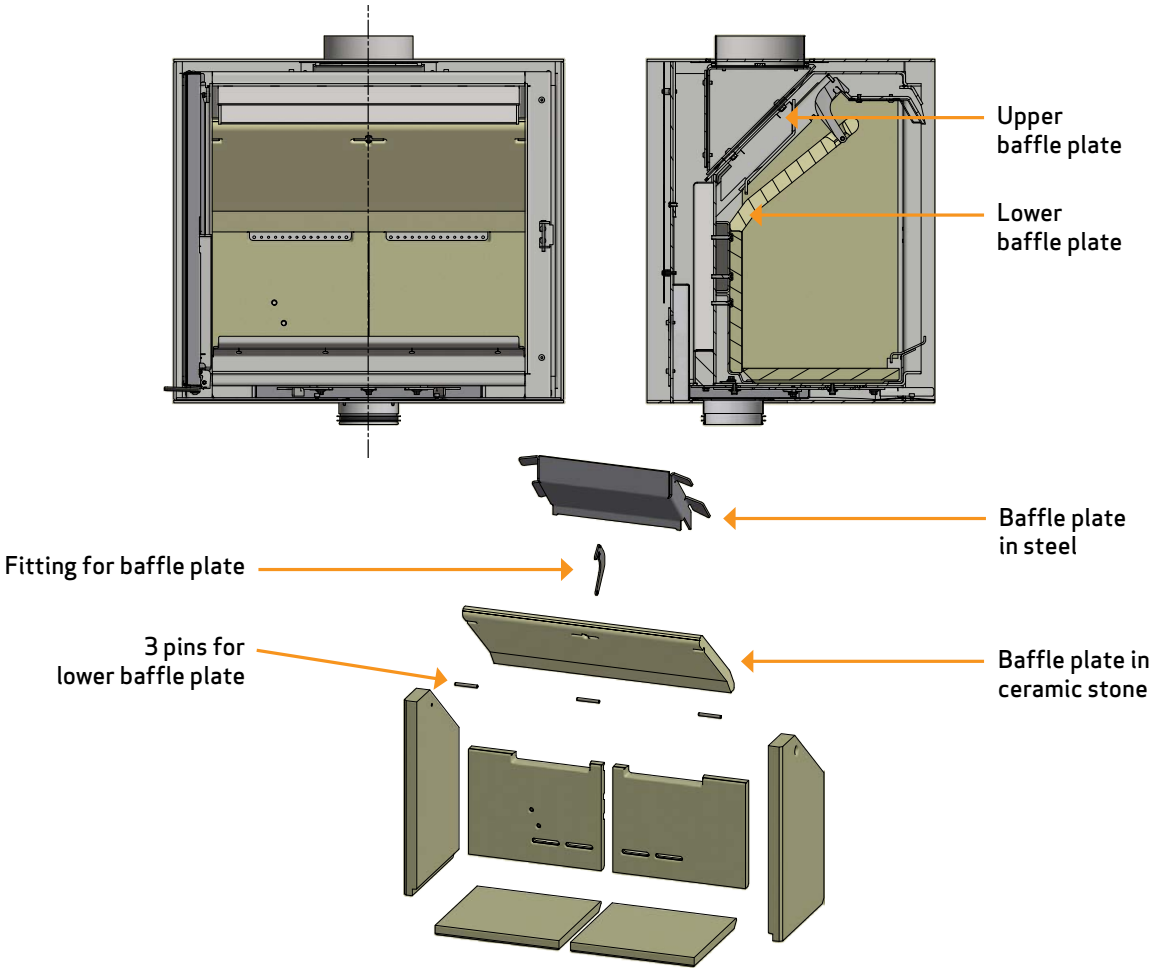

DISPOSAL OF STOVE PARTS

Steel/cast iron	Send for recycling
Glass	Dispose of as ceramic waste
Combustion chamber lining	Ceramic stone and chamotte are not recyclable. Dispose of as waste
Baffle plate	Ceramic stone and chamotte are not recyclable. Dispose of as waste
Gaskets	Dispose of as waste

TROUBLESHOOTING

SMOKE ESCAPING

- Damp wood
- Chimney is not properly dimensioned for the stove
- Is the chimney the right height for its surroundings?
- At rear outlet, check that the flue pipe does not obstruct the chimney draught
- Chimney not drawing properly
- Check if the smoke gas pipe/chimney are blocked
- Vacuum in room
- The door is opened before the embers have burned down sufficiently

WOOD BURNING TOO QUICKLY

- The air valves are set incorrectly
- Inferior firewood (waste wood, pallets etc.)
- The baffle plates is incorrectly mounted or missing
- Chimney too large

SOOT BUILD-UP ON GLASS

- Incorrect secondary airflow setting
- Damp wood
- Inferior firewood (waste wood, pallets etc.)
- Vacuum in room
- Excessive primary air
- Wood pieces too large on lighting
- Chimney not drawing sufficiently

WHITE SHADOW ON THE INSIDE OF THE GLASS

- Over-firing (See "Instructions for heating")
- Vacuum in the room
- Too much primary air

EXCESSIVE SOOT BUILD-UP IN CHIMNEY

- Poor burning (more air required)
- Damp wood

THE SURFACE OF THE STOVE IS TURNING GREY

- Overheating (see instructions for heating)

POOR HEATING PERFORMANCE OF STOVE

- Damp wood
- Inferior wood quality with low fuel value
- Not enough wood
- Baffle plates are not fitted correctly

SMELL AND SOUND OF THE STOVE

- The lacquer on the stove hardens when you use the stove for the first time; this can cause an odour. Open a window or a door for ventilation, and make sure the stove is heated up sufficiently to avoid odours later
- When heating up and cooling down, the stove may make some clicking noises. These are due to the huge temperature differences to which the material is exposed and do not indicate any product defects

WARRANTY

All wood-fired Scan products are made of high-quality materials and subject to strict quality controls before leaving the factory. We give a warranty of 5 years on manufacturing errors or defects.

You must quote your stove's product registration number when you contact us or your authorized Scan dealer with a warranty claim.

The warranty covers all parts which in the opinion of Scan A/S require repair or replacement due to manufacturing or construction error

The warranty applies to the original purchaser of the product only, and is not transferable (except on prior sale).

The warranty covers only damage caused by manufacturing or construction errors.

THE FOLLOWING PARTS ARE NOT COVERED BY THE WARRANTY

- Wear and tear parts, such as the combustion chamber liners, baffle plates, riddling grate, glass, and seals (except for defects which were present on delivery)
- Defects caused by external chemical and physical influences during transportation, storage and assembly, or at a later time.
- Soot build-up caused by poor chimney draught, damp wood, or improper use
- Costs of additional heating in connection with a repair
- Transport costs
- Costs for setting up, removing the wood stove

THIS WARRANTY IS VOID

- In case of incorrect installation (the installer is responsible for observing and complying with legal requirements and local bylaws, along with this Instructions manual for the wood-burning stove and accessories)
- In case of improper use, and/or use of prohibited fuels, non-original spares (see this instructions manual)
- If the product registration number of the stove has been removed or damaged
- In case of repairs that do not comply with our instructions or instructions by an authorized Scan dealer
- In case of any manipulation of the original state of this Scan product or its accessories. Any unauthorized modification of the stove may not be carried out
- This warranty is only valid in the country to which this Scan product was originally supplied

Always use original replacement parts, or parts recommended by the manufacturer.

NOTES

Product registration number

Quote this number at all enquiries